RESTRAINT SYSTEM

SECTION RS

GI
MA
EM
LC
EC
FE
CL
MT
AT
AX
SU
BR
ST
RS
BT
HA
SC
EL
IDX

CONTENTS

SEAT BELTS 3
Precautions 3
SUPPLEMENTAL RESTRAINT SYSTEM (SRS) "AIR BAG" AND "SEAT BELT PRE-TENSIONER" 3
PRECAUTION FOR SEAT BELT SERVICE 3
Front Seat Belt 5
REMOVAL AND INSTALLATION 5
Rear Seat Belt 7
REMOVAL AND INSTALLATION (MODELS WITH BUILT-IN SEAT BELT) 7
REMOVAL AND INSTALLATION (MODELS WITH ROOF SEAT BELT) 10
REMOVAL AND INSTALLATION (MODELS WITH 2-POINTS CENTER SEAT BELT) 13
SUPPLEMENTAL RESTRAINT SYSTEM (SRS) 16
Precautions 16
SUPPLEMENTAL RESTRAINT SYSTEM (SRS) "AIR BAG" AND "SEAT BELT PRE-TENSIONER" 16
PRECAUTIONS FOR SRS "AIR BAG" AND "SEAT BELT PRE-TENSIONER" SERVICE 16
WIRING DIAGRAMS AND TROUBLE DIAGNOSIS 16
Preparation 17
SPECIAL SERVICE TOOLS 17
COMMERCIAL SERVICE TOOL 18
SRS Configuration 18
Seat Belt Pre-tensioner with Load Limiter 19
Built-in Type Side Air Bag 19
SRS Component Parts Location 20
Maintenance Items 20
Diagnosis Sensor Unit 21
REMOVAL AND INSTALLATION 21
Front Seat Belt Pre-tensioner 22
REMOVAL AND INSTALLATION 22
Side Air Bag (Satellite) Sensor 23
REMOVAL AND INSTALLATION 23
Driver Air Bag Module and Spiral Cable 24
REMOVAL AND INSTALLATION 24
REMOVAL 24
INSTALLATION 25
COMPONENTS INSPECTION 26
Front Passenger Air Bag Module 26
REMOVAL 26
INSTALLATION 27
Front Side Air Bag Module 28
REMOVAL 28
INSTALLATION 29
Disposal of Air Bag Module and Seat Belt Pre-tensioner 29
CHECKING DEPLOYMENT TOOL 30
DEPLOYMENT PROCEDURES FOR AIR BAG MODULE (OUTSIDE OF VEHICLE) 31
DEPLOYMENT PROCEDURES FOR SEAT BELT PRE-TENSIONER (OUTSIDE OF VEHICLE) 33
DEPLOYMENT OF AIR BAG MODULE AND SEAT BELT PRE-TENSIONER WHILE MOUNTED IN VEHICLE 34
DISPOSING OF AIR BAG MODULE AND SEAT BELT PRE-TENSIONER 35
Trouble Diagnoses Introduction 36
DIAGNOSIS FUNCTION 36
DIAGNOSIS MODE FOR CONSULT-II 36
HOW TO CHANGE SELF-DIAGNOSIS MODE WITH CONSULT-II 37
HOW TO CHANGE SELF-DIAGNOSIS MODE WITHOUT CONSULT-II 37
HOW TO ERASE SELF-DIAGNOSIS RESULTS 37
How to Perform Trouble Diagnoses for Quick and Accurate Repair 39
INFORMATION FROM CUSTOMER 39
PRELIMINARY CHECK 39
WORK FLOW 40
Wiring Diagram - SRS - 41
MODELS WITH FRONT SEAT BELT PRE-TENSIONER B21, B27 42
SRS Operation Check 43
DIAGNOSTIC PROCEDURE 1 43
Trouble Diagnoses with CONSULT-II 44
DIAGNOSTIC PROCEDURE 2 44
DIAGNOSTIC PROCEDURE 3 47
DIAGNOSTIC PROCEDURE 4 (CONTINUED FROM DIAGNOSTIC PROCEDURE 2) 49
DIAGNOSTIC PROCEDURE 5 49

CONTENTS (Cont'd)

Trouble Diagnoses without CONSULT-II.....53
DIAGNOSTIC PROCEDURE 6.....53
DIAGNOSTIC PROCEDURE 7.....58
DIAGNOSTIC PROCEDURE 8 (CONTINUED FROM DIAGNOSTIC PROCEDURE 6).....60
Trouble Diagnoses: "AIR BAG" Warning Lamp Does Not Turn Off.....61
DIAGNOSTIC PROCEDURE 9.....61
Trouble Diagnoses: "AIR BAG" Warning Lamp Does Not Turn On.....63
DIAGNOSTIC PROCEDURE 10.....63
Collision Diagnosis.....64
FOR FRONTAL COLLISION.....64
FOR SIDE COLLISION.....66

Precautions

SUPPLEMENTAL RESTRAINT SYSTEM (SRS) “AIR BAG” AND “SEAT BELT PRE-TENSIONER”

NLRS0001

The Supplemental Restraint System such as “AIR BAG” and “SEAT BELT PRE-TENSIONER” used along with a seat belt, helps to reduce the risk or severity of injury to the driver and front passenger for certain types of collision. The SRS composition which is available to NISSAN MODEL V10 is as follows (The composition varies according to the destination and optional equipment.):

- For a frontal collision
  The Supplemental Restraint System consists of driver’s air bag module (located in the center of the steering wheel), front passenger air bag module (located on the instrument panel on passenger side), front seat belt pre-tensioners, a diagnosis sensor unit, warning lamp, wiring harness and spiral cable.
- For a side collision
  The Supplemental Restraint System consists of front side air bag module (located in the outer side of front seat), side air bag (satellite) sensor, diagnosis sensor unit (one of components of air bags for a frontal collision), wiring harness, warning lamp (one of components of air bags for a frontal collision).

WARNING:

- **To avoid rendering the SRS inoperative, which could increase the risk of personal injury or death in the event of a collision which would result in air bag inflation, all maintenance should be performed by an authorized NISSAN dealer.**
- **Improper maintenance, including incorrect removal and installation of the SRS, can lead to personal injury caused by unintentional activation of the system.**
- **Do not use electrical test equipment on any circuit related to the SRS unless instructed to in this Service Manual. Spiral cable and wiring harnesses covered with yellow insulation tape either just before the harness connectors or for the complete harness are related to the SRS.**

PRECAUTION FOR SEAT BELT SERVICE

NLRS0002

CAUTION:

- **Before removing the seat belt pre-tensioner assembly, turn the ignition switch off, disconnect both battery cables and wait at least 3 minutes.**
- **Do not use electrical test equipment for seat belt pre-tensioner connector.**
- **After replacing or reinstalling seat belt pre-tensioner assembly, or reconnecting seat belt pre-tensioner connector, check the system function. Refer to “SRS Operation Check” for details. (RS-43)**
- **Do not disassemble buckle or seat belt assembly.**
- **Replace anchor bolts if they are deformed or worn out.**
- **Never oil tongue and buckle.**
- **If any component of seat belt assembly is questionable, do not repair. Replace the whole seat belt assembly.**
- **If webbing is cut, frayed, or damaged, replace seat belt assembly.**
- **When replacing seat belt assembly, use a genuine seat belt assembly.**

After A Collision

NLRS0002S01

WARNING:

Inspect all seat belt assemblies including retractors and attaching hardware after any collision.
NISSAN recommends that all seat belt assemblies in use during a collision be replaced unless the collision was minor and the belts show no damage and continue to operate properly. Failure to do so could result in serious personal injury in an accident. Seat belt assemblies not in use during a collision should also be replaced if either damage or improper operation is noted. Seat belt pre-tensioner should be replaced even if the seat belts are not in use during a frontal collision in which the air bags are deployed.

Replace any seat belt assembly if:

- The seat belt was in use at the time of a collision (except for minor collisions and the belts, retractors and buckles show no damage and continue to operate properly).
- The seat belt was damaged in an accident. (i.e. torn webbing, bent retractor or guide, etc.)
- The seat belt attaching point was damaged in an accident. Inspect the seat belt attaching area for damage or distortion and repair as necessary before installing a new seat belt assembly.
- Anchor bolts are deformed or worn out.

CAUTION:

- **After any collision, inspect all seat belt assemblies, including retractors and other attached hardwares (i.e. anchor bolt, guide rail set). Nissan recommends to replace all seat belt assemblies in use during a collision, unless not damaged and properly operating after minor collision.**
  Also inspect seat belt assemblies not in use during a collision, and replace if damaged or improperly operating. Front seat belt pre-tensioner should be replaced even if the seat belt are not in use during a frontal collision where the driver and passenger air bags are deployed.
- **If any component of seat belt assembly is questionable, do not repair. Replace as seat belt assembly.**
- **If webbing is cut, frayed, or damaged, replace belt assembly.**
- **Do not spill drinks, oil etc. on inner lap belt buckle. Never oil tongue and buckle.**
- **Use a NISSAN genuine seat belt assembly.**

Anchor bolt

43.1 - 54.9 N·m
(4.4 - 5.6 kg-m, 32 - 40 ft-lb)

Front seat belt

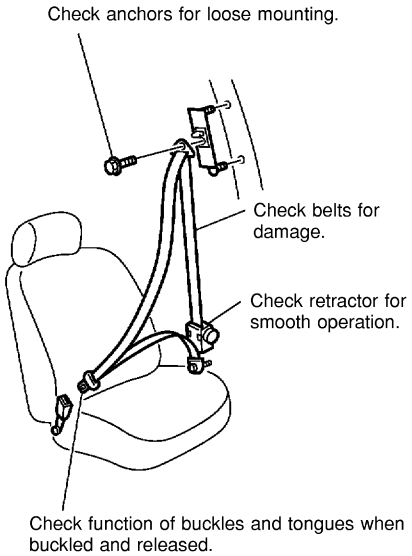

Rear seat belt

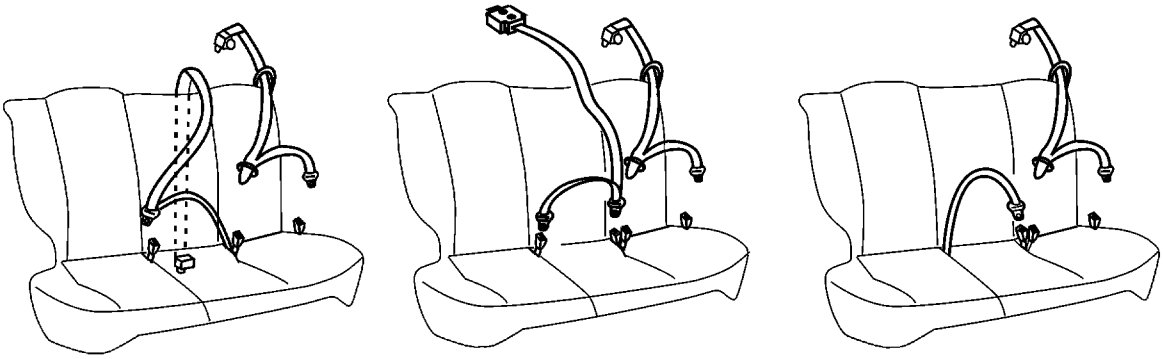

NRS127

Front Seat Belt

REMOVAL AND INSTALLATION

=NLRS0056

1. Slide the seat all the way forward. Tilt the seatback toward the front and remove the rear floor boxes.
2. Remove adjuster cover. A
3. Remove floor anchor bolt. B
4. Remove shoulder anchor bolt. C
5. Remove front and rear kicking plate, then remove center pillar upper and lower garnish. Refer to BT-27, “SIDE AND FLOOR TRIM” for details.
6. Disconnect seat belt pre-tensioner connector.
7. Remove the screw securing seat belt pre-tensioner retractor, then remove seat belt and seat belt pre-tensioner retractor.
8. Remove bolts securing seat belt adjuster, then remove seat belt adjuster.

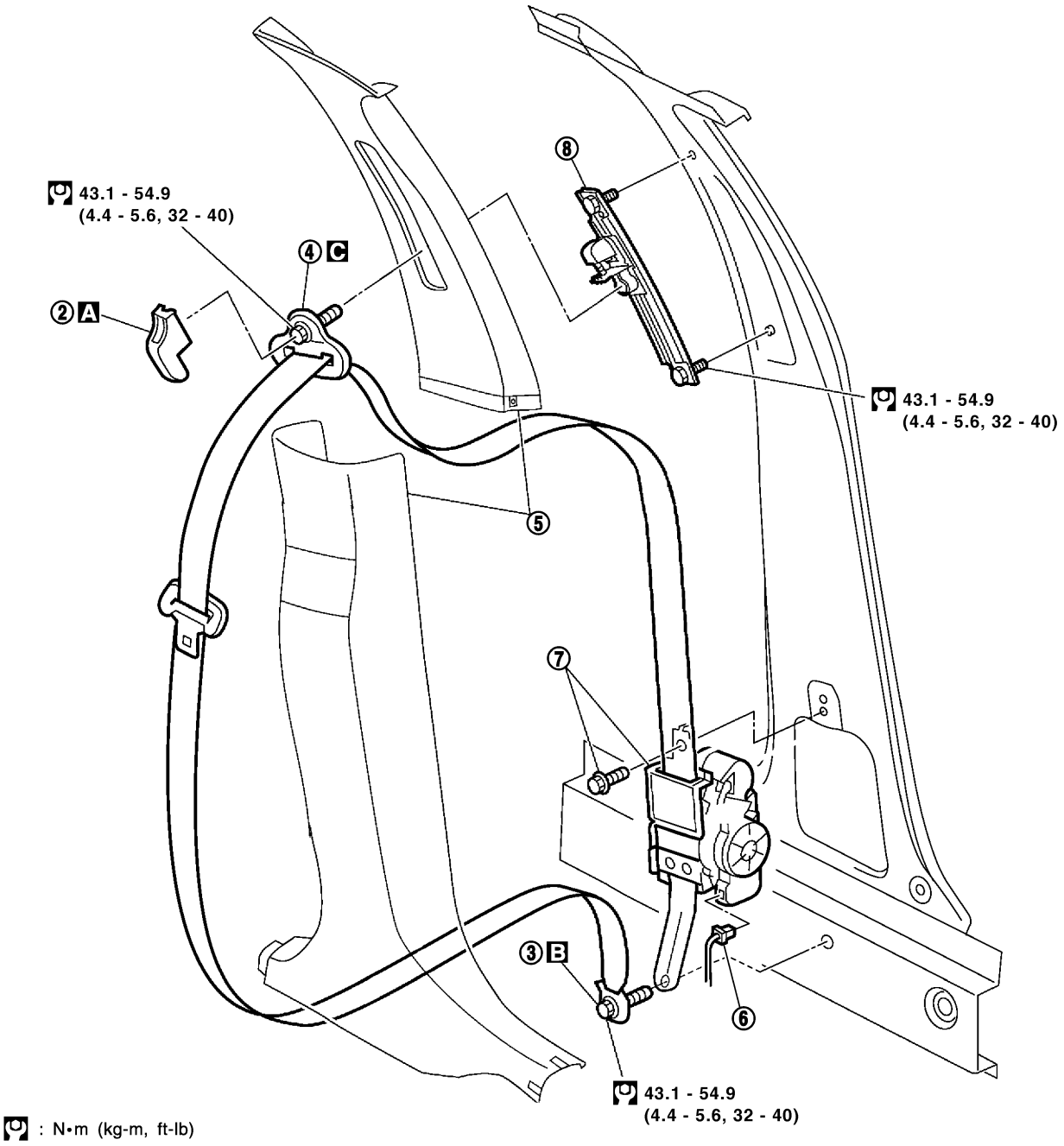

: N•m (kg-m, ft-lb)

YRS109

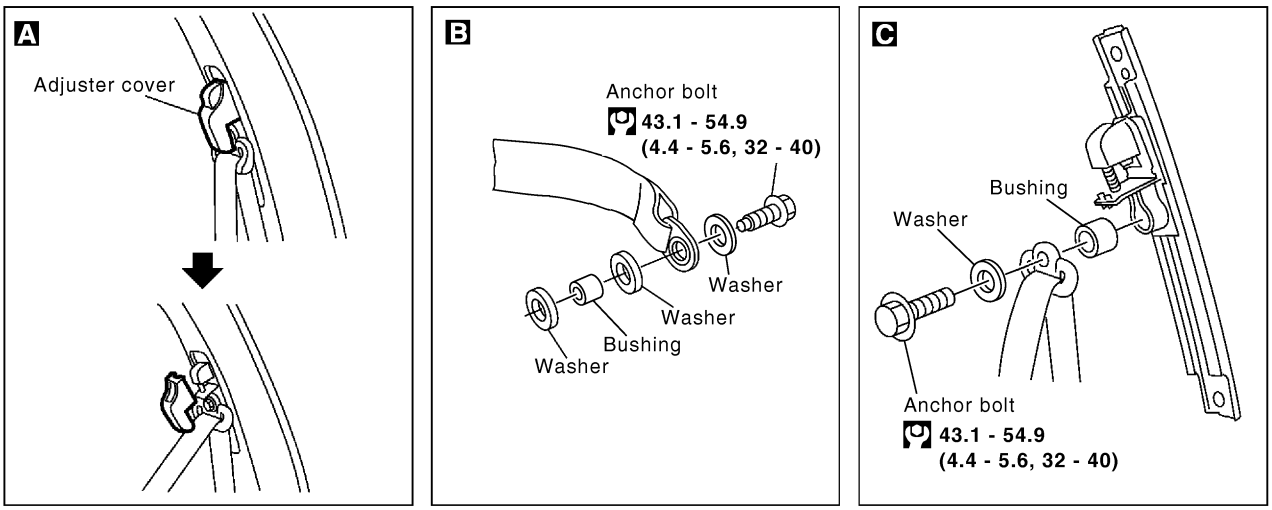

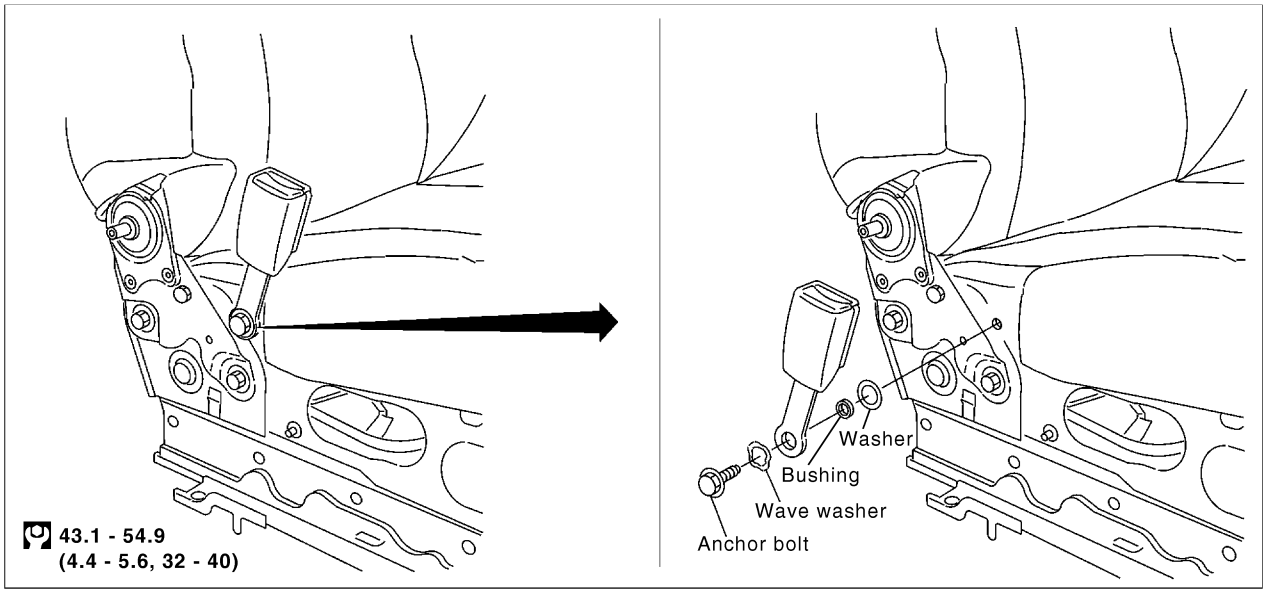

: N•m (kg-m, ft-lb)

YRS110

Rear Seat Belt

REMOVAL AND INSTALLATION (MODELS WITH BUILT-IN SEAT BELT)

=NLRS0058

1. Remove the outer rear seats. Refer to BT-48, “REAR SEAT” for details.
2. Remove lower seat trim.
3. Remove the special bolts, using the TAMPER RESISTANT TORX (Size T50) and seat belt buckles can be removed. A B
4. Remove the center seat. Refer to BT-48, “REAR SEAT” for details.
5. Remove lower seat trim and rear back seat garnish.
6. Remove the special bolts, using the TAMPER RESISTANT TORX (Size T50) and the seat belt - bracket, - retractor and - buckle can be removed. C D E
7. Remove rear side garnish. Refer to BT-27, “SIDE AND FLOOR TRIM” for details.
8. Remove bolts securing rear seat belt retractor, then remove seat belt and seat belt retractor. F

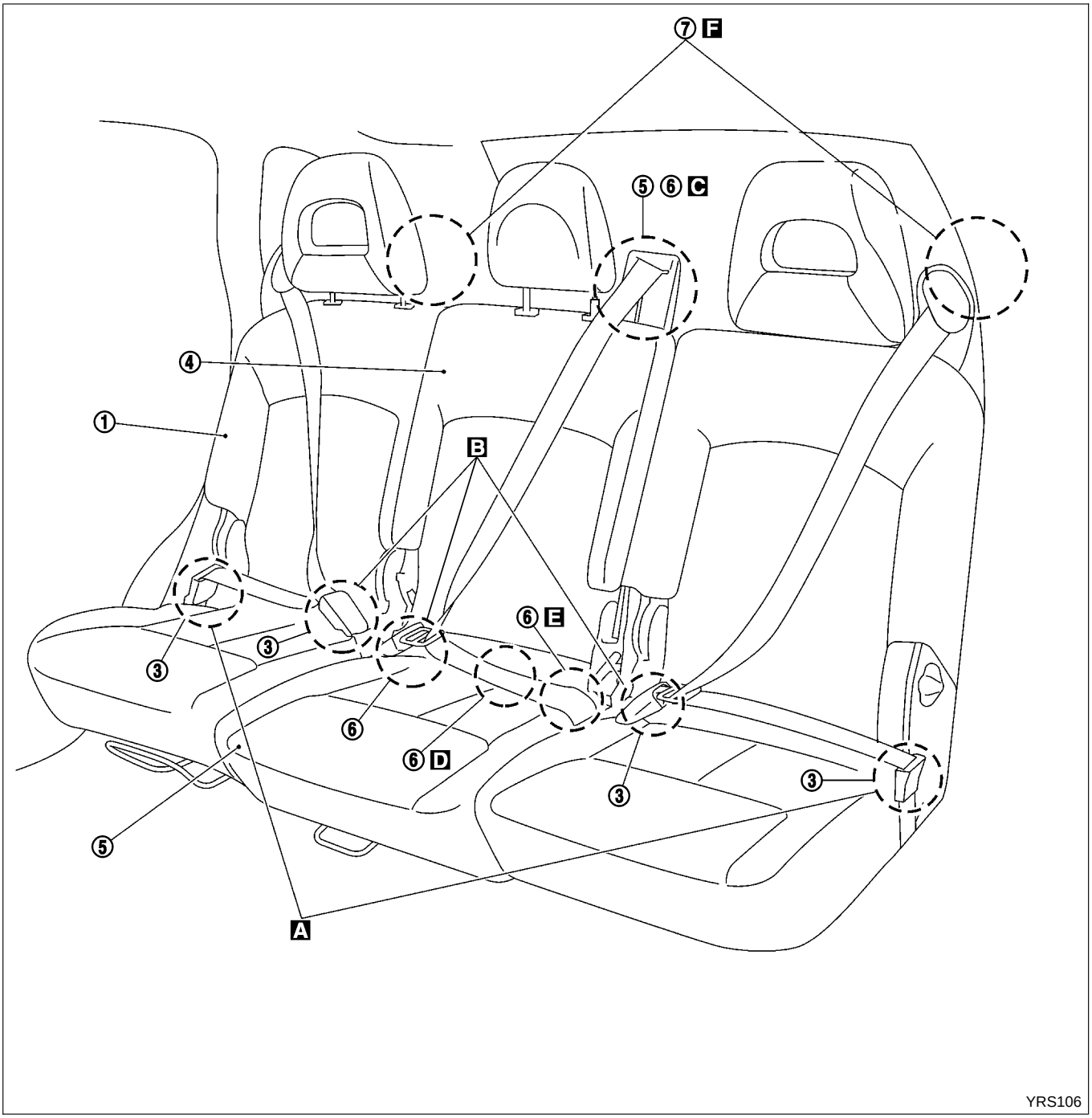

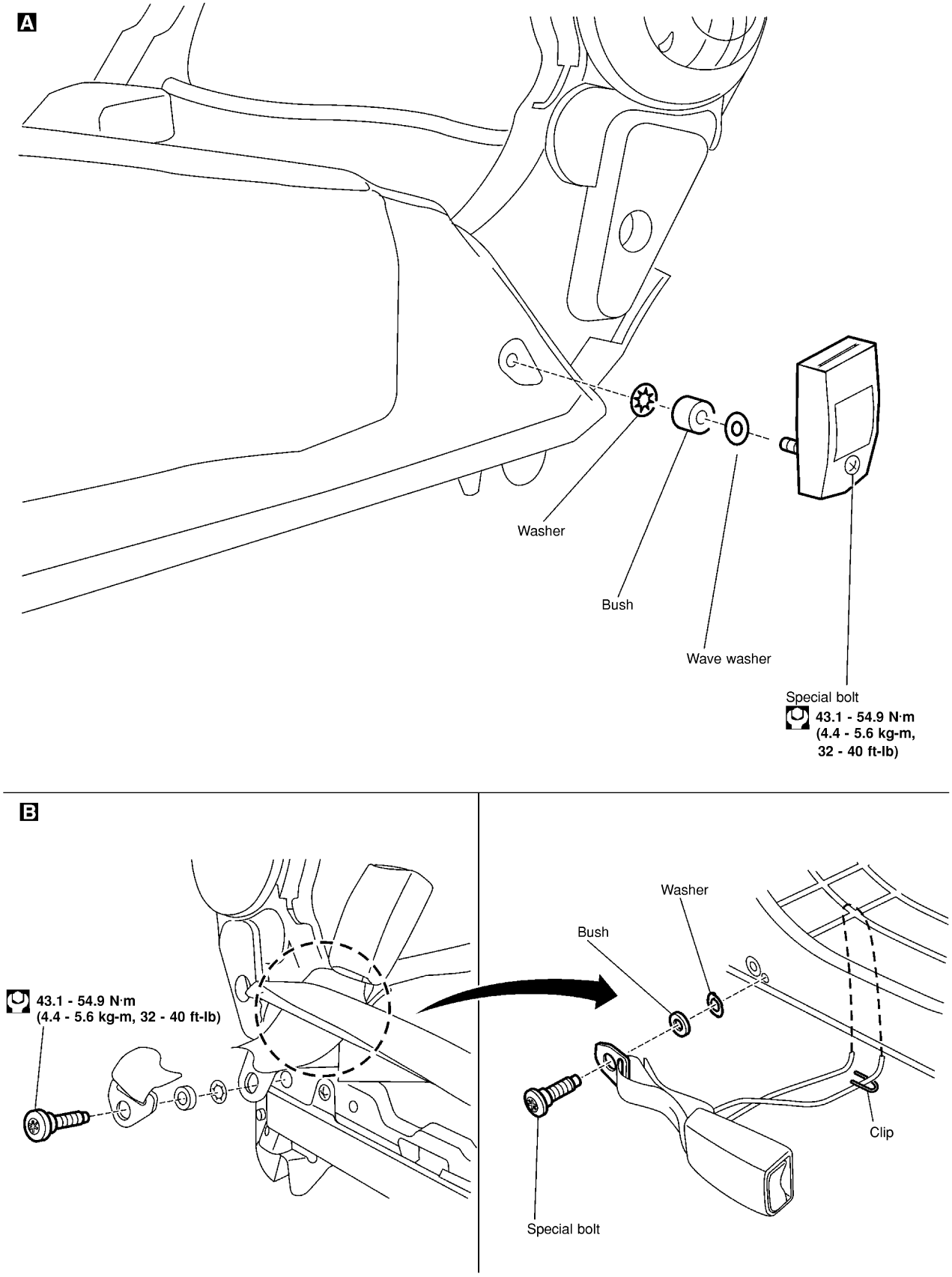
A
Washer
Bush
Wave washer
Special bolt
43.1 - 54.9 N·m
(4.4 - 5.6 kg-m,
32 - 40 ft-lb)
B
43.1 - 54.9 N·m
(4.4 - 5.6 kg-m, 32 - 40 ft-lb)
Washer
Bush
Clip
Special bolt

NRS099

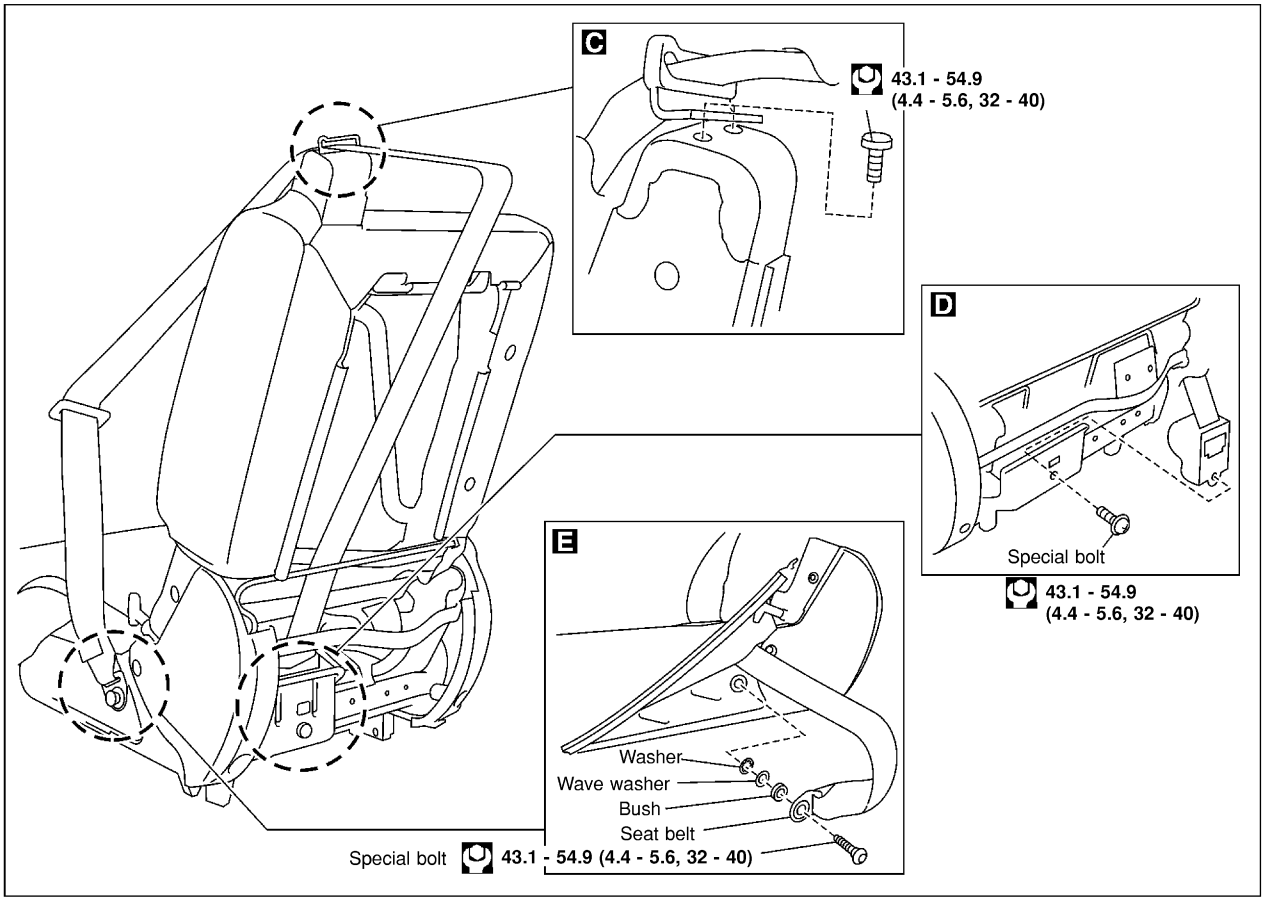

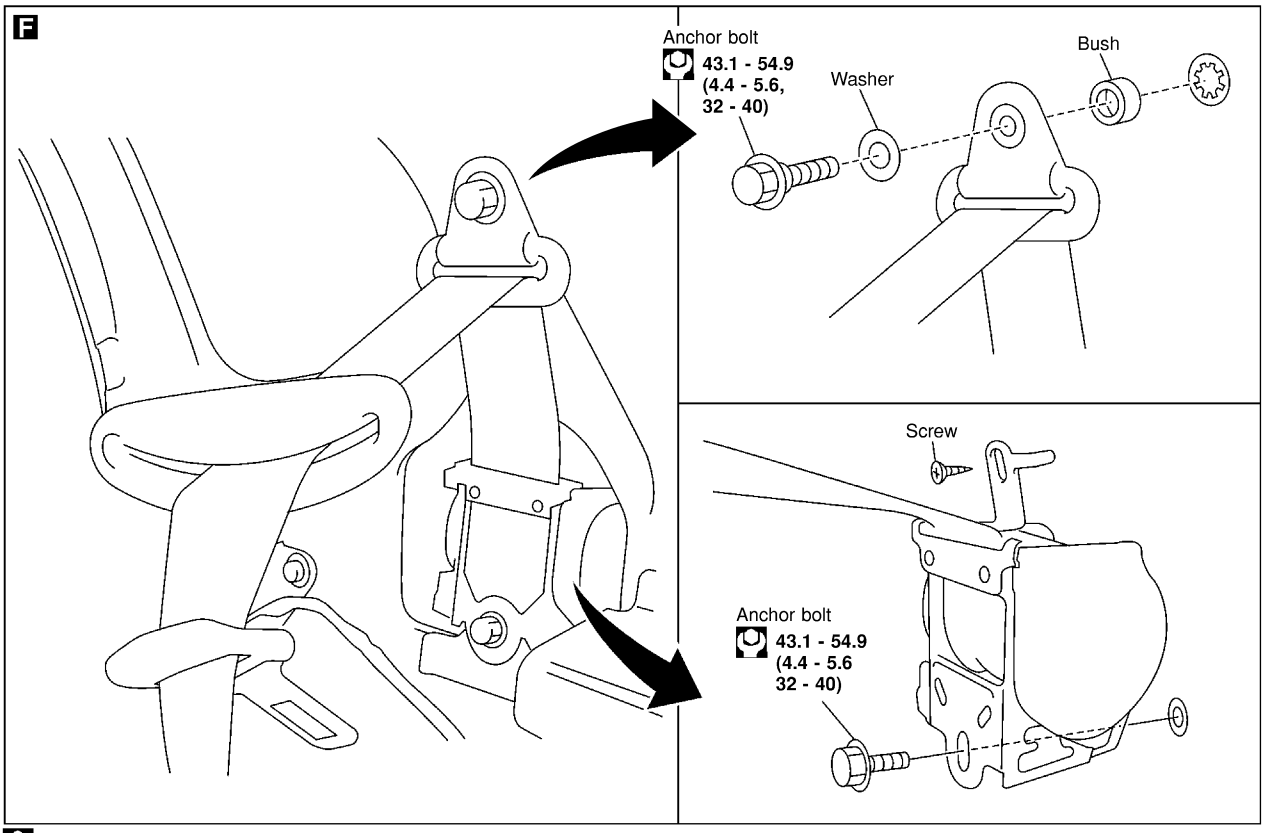

: N·m (kg-m, ft-lb)

NRS100

REMOVAL AND INSTALLATION (MODELS WITH ROOF SEAT BELT)

=NLRS0063

1. Remove the outer rear seats. Refer to BT-48, "REAR SEAT" for details.
2. Remove lower seat trim.
3. Remove the special bolts, using the TAMPER RESISTANT TORX (Size T50) and seat belt buckles can be removed. A B
4. Remove the center seat. Refer to BT-48, "REAR SEAT" for details.
5. Remove lower seat trim.
6. Remove the special bolts, using the TAMPER RESISTANT TORX (Size T50) and the seat belt - bracket, and - buckle can be removed. B
7. Remove cover garnish at headlining. Refer to BT-27, "SIDE AND FLOOR TRIM" for details. Then remove seat belt retractor. C
8. Remove rear side garnish. Refer to BT-27, "SIDE AND FLOOR TRIM" for details.
9. Remove bolts securing rear seat belt retractor, then remove seat belt and seat belt retractor. D

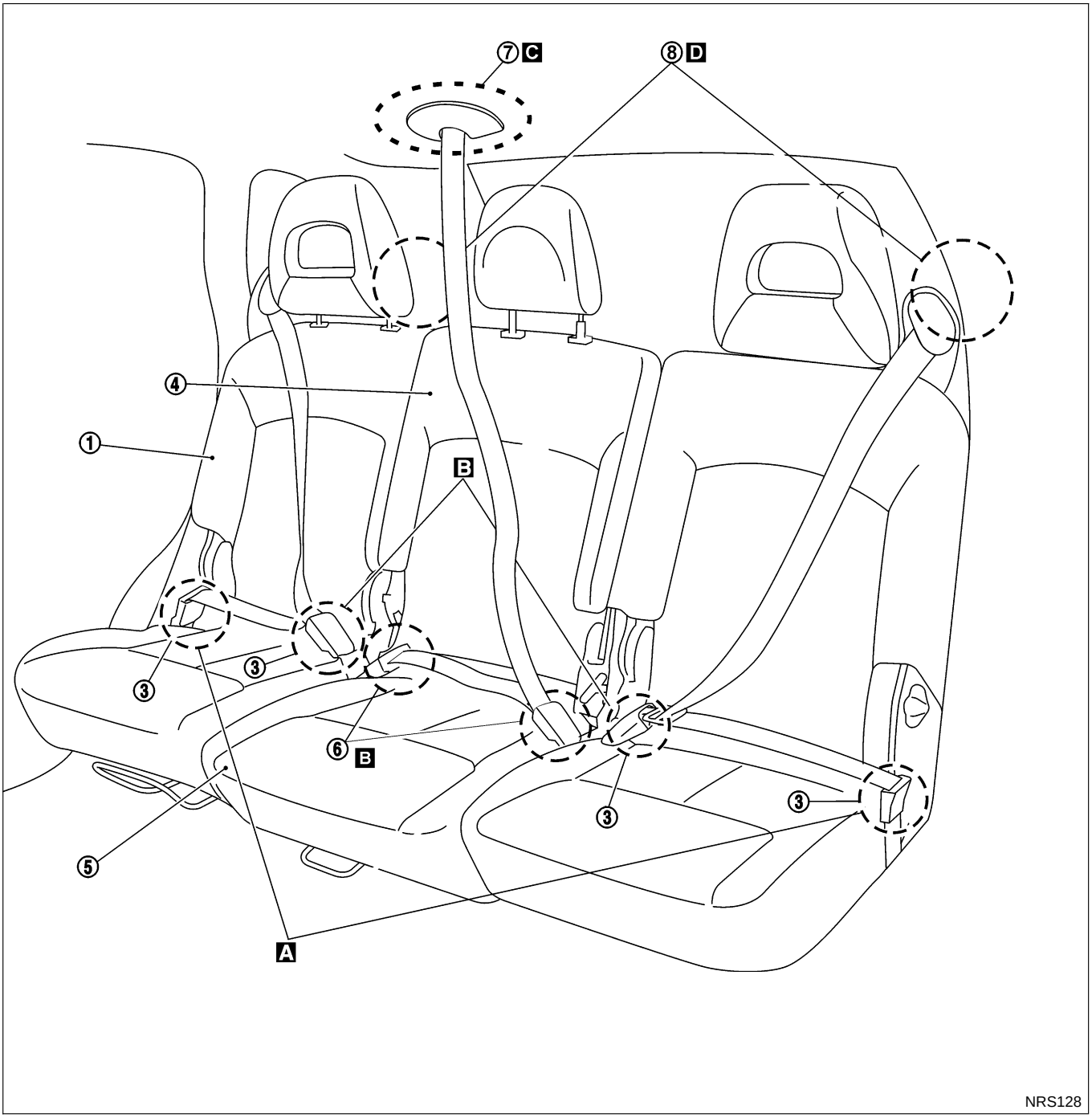

NRS128

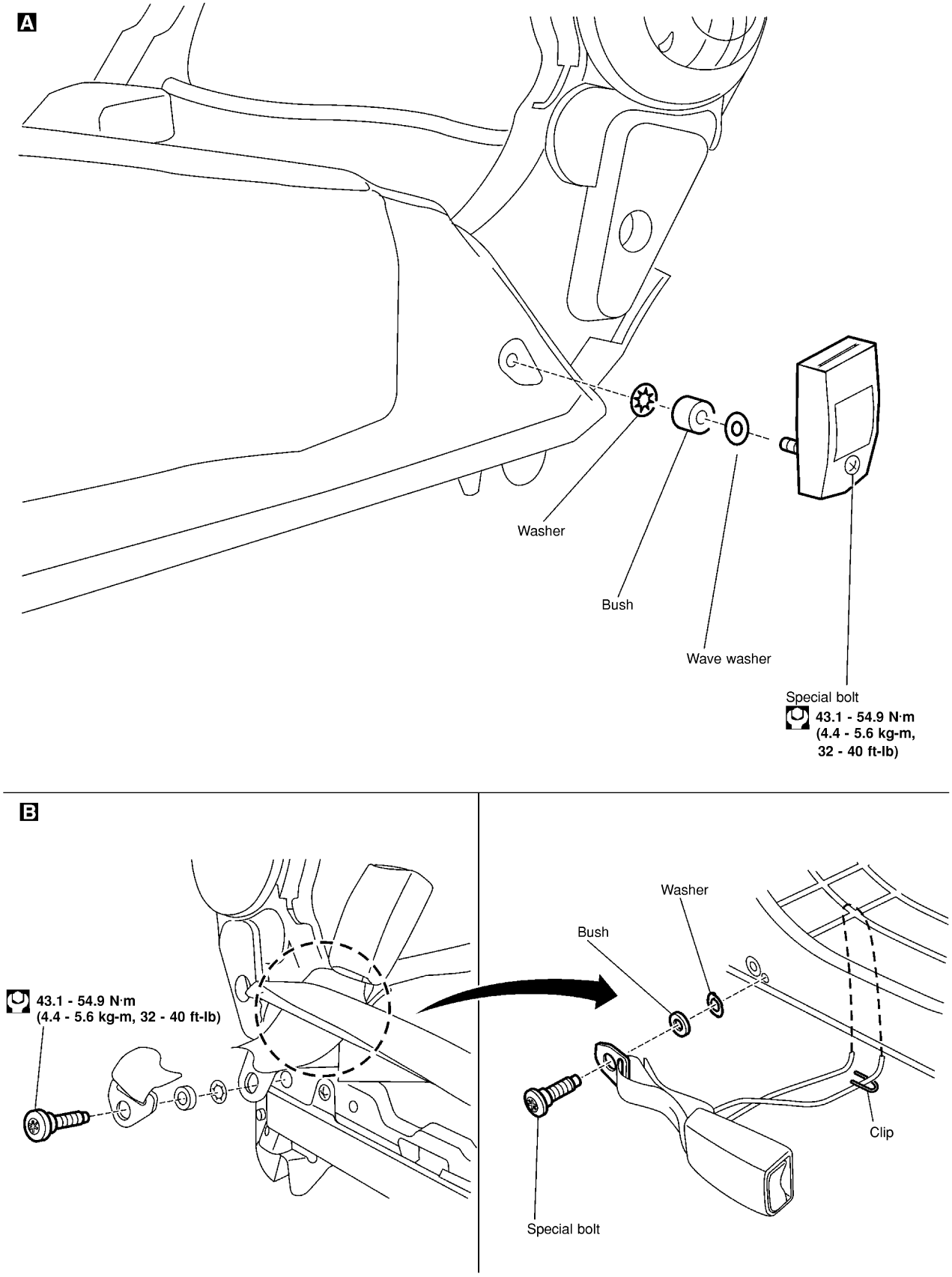
A
Washer
Bush
Wave washer
Special bolt
43.1 - 54.9 N·m
(4.4 - 5.6 kg-m,
32 - 40 ft-lb)
B
43.1 - 54.9 N·m
(4.4 - 5.6 kg-m, 32 - 40 ft-lb)
Washer
Bush
Clip
Special bolt

NRS099

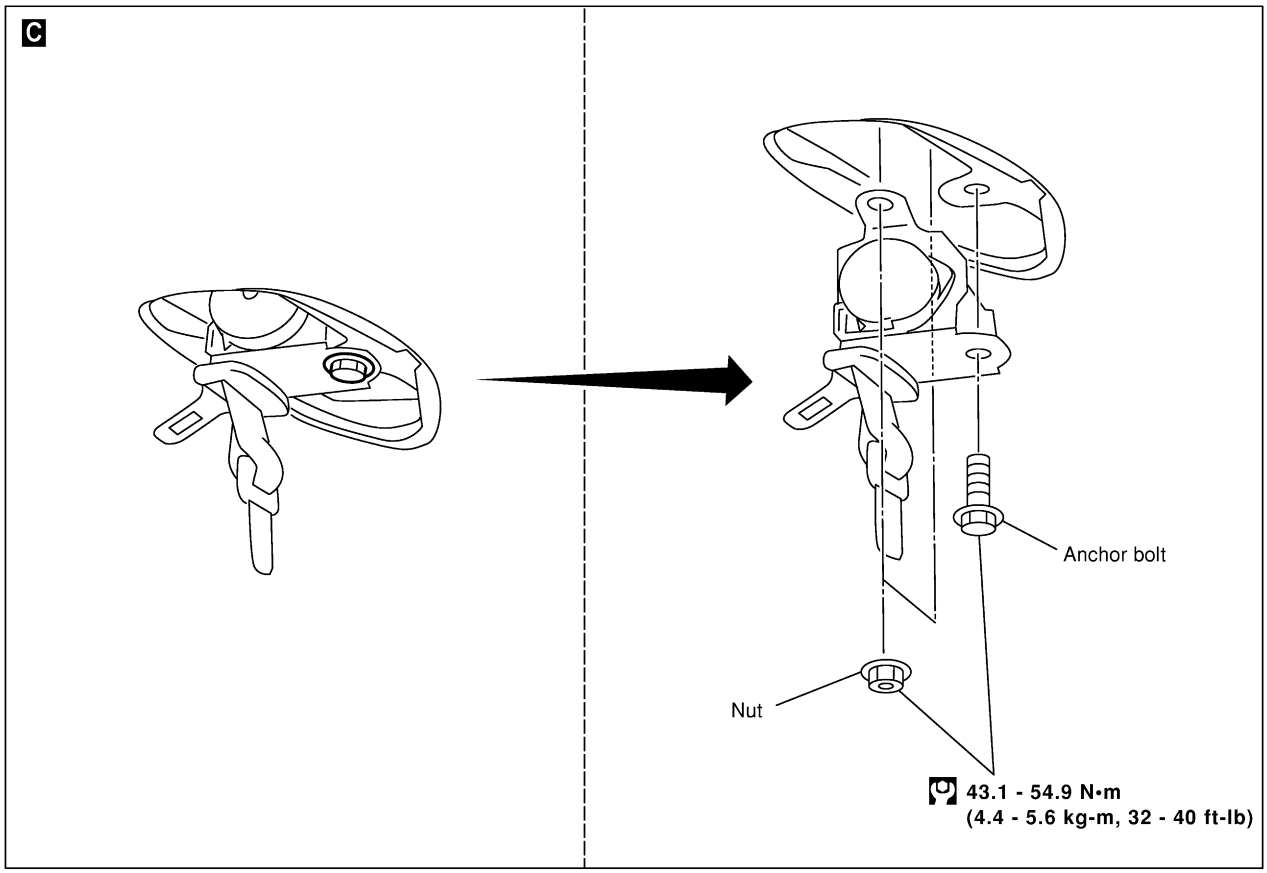

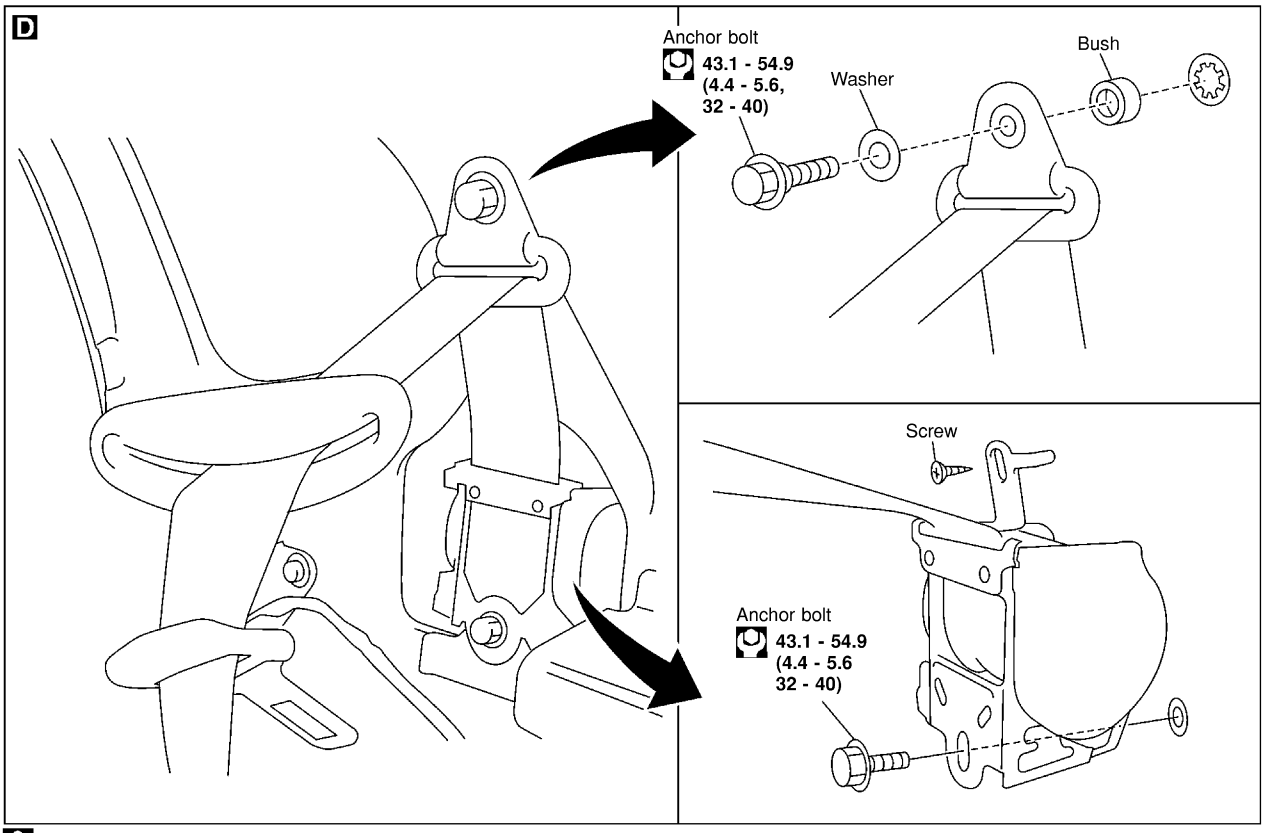

: N·m (kg-m, ft-lb)

NRS133

REMOVAL AND INSTALLATION (MODELS WITH 2-POINTS CENTER SEAT BELT)

=NLRS0064

1. Remove the outer rear seats. Refer to BT-48, "REAR SEAT" for details.
2. Remove lower seat trim.
3. Remove the special bolts, using the TAMPER RESISTANT TORX (Size T50) and seat belt buckles can be removed. A B
4. Remove the center seat. Refer to BT-48, "REAR SEAT" for details.
5. Remove lower seat trim and rear back seat garnish.
6. Remove the special bolts, using the TAMPER RESISTANT TORX (Size T50) and the seat belt - bracket, buckle can be removed. B C
7. Remove rear side garnish. Refer to BT-27, "SIDE AND FLOOR TRIM" for details.
8. Remove bolts securing rear seat belt retractor, then remove seat belt and seat belt retractor. D

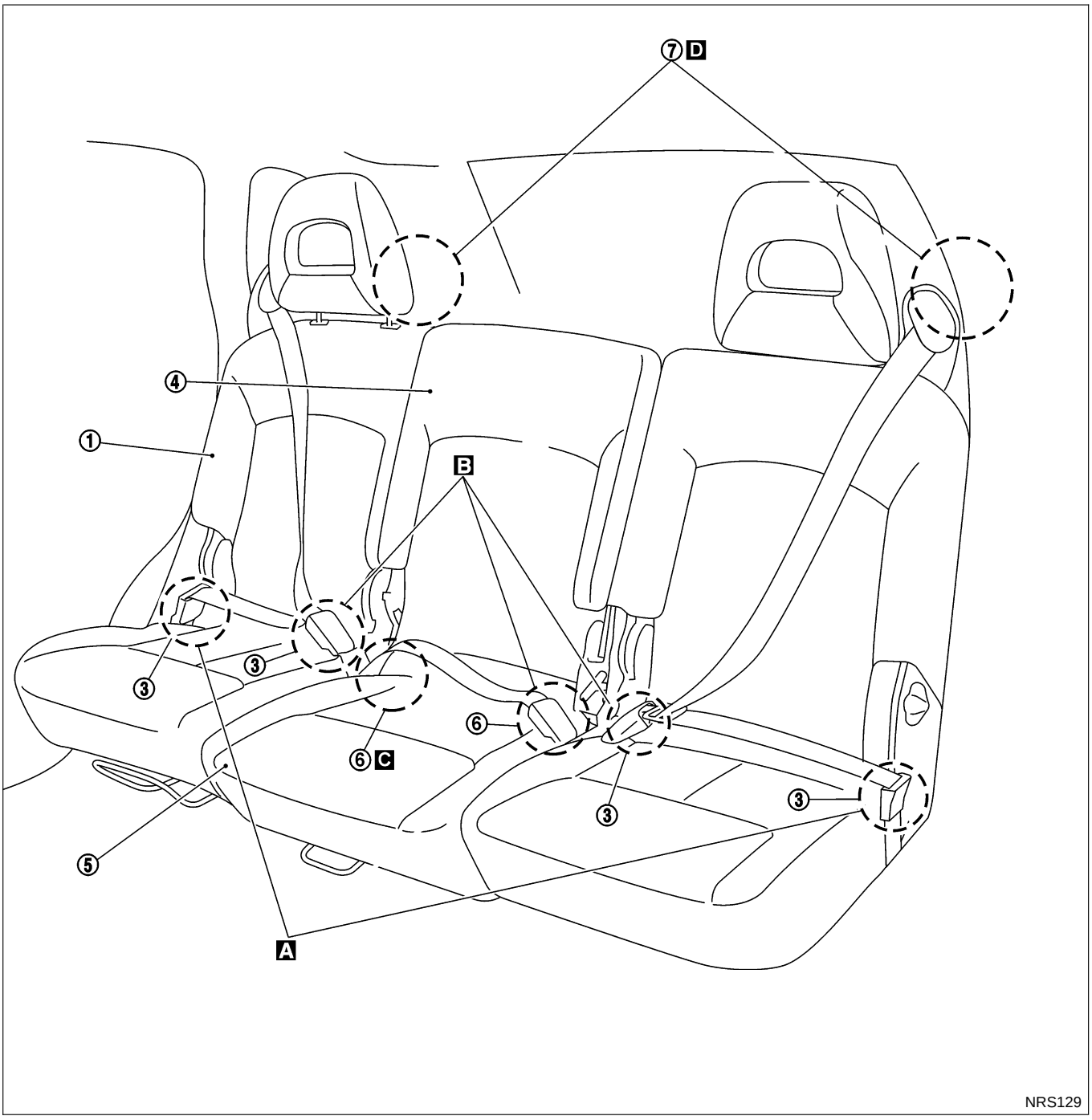

NRS129

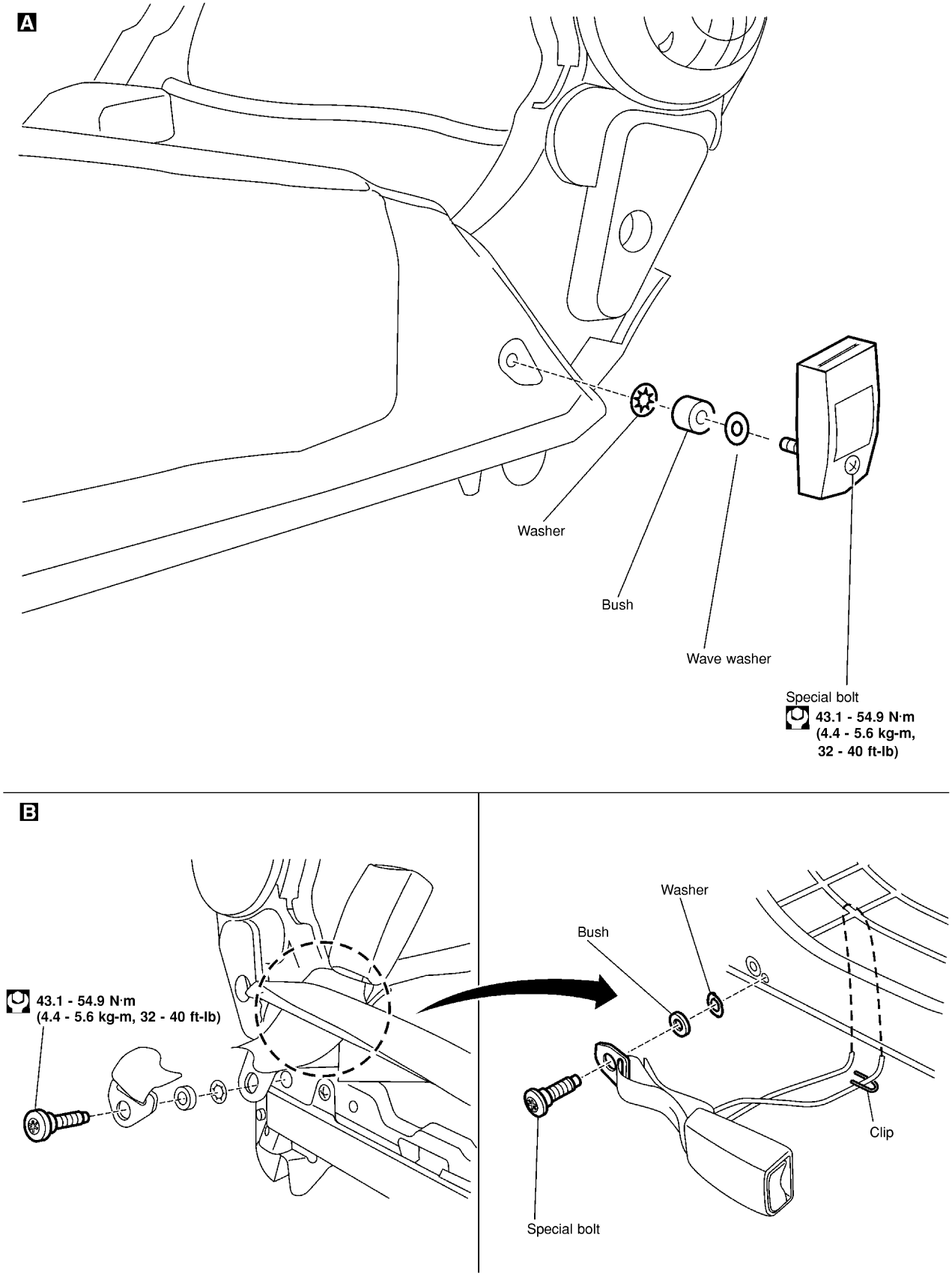
A
Washer
Bush
Wave washer
Special bolt
43.1 - 54.9 N·m
(4.4 - 5.6 kg-m,
32 - 40 ft-lb)
B
43.1 - 54.9 N·m
(4.4 - 5.6 kg-m, 32 - 40 ft-lb)
Washer
Bush
Clip
Special bolt

NRS099

C

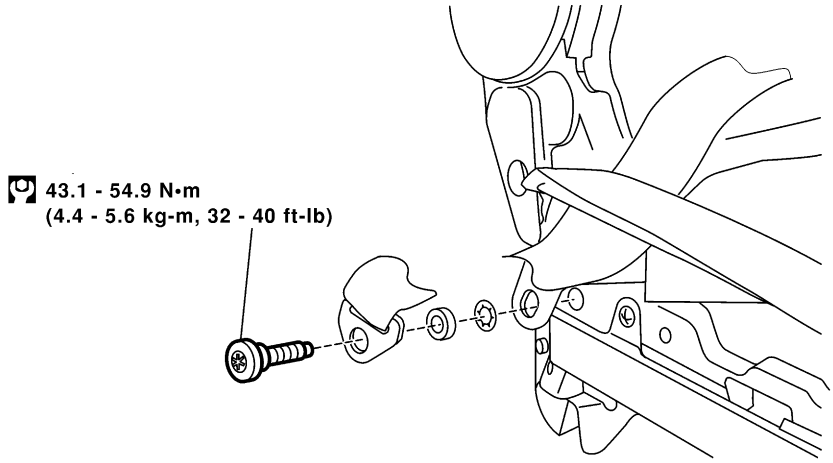
43.1 - 54.9 N•m
(4.4 - 5.6 kg-m, 32 - 40 ft-lb)

D

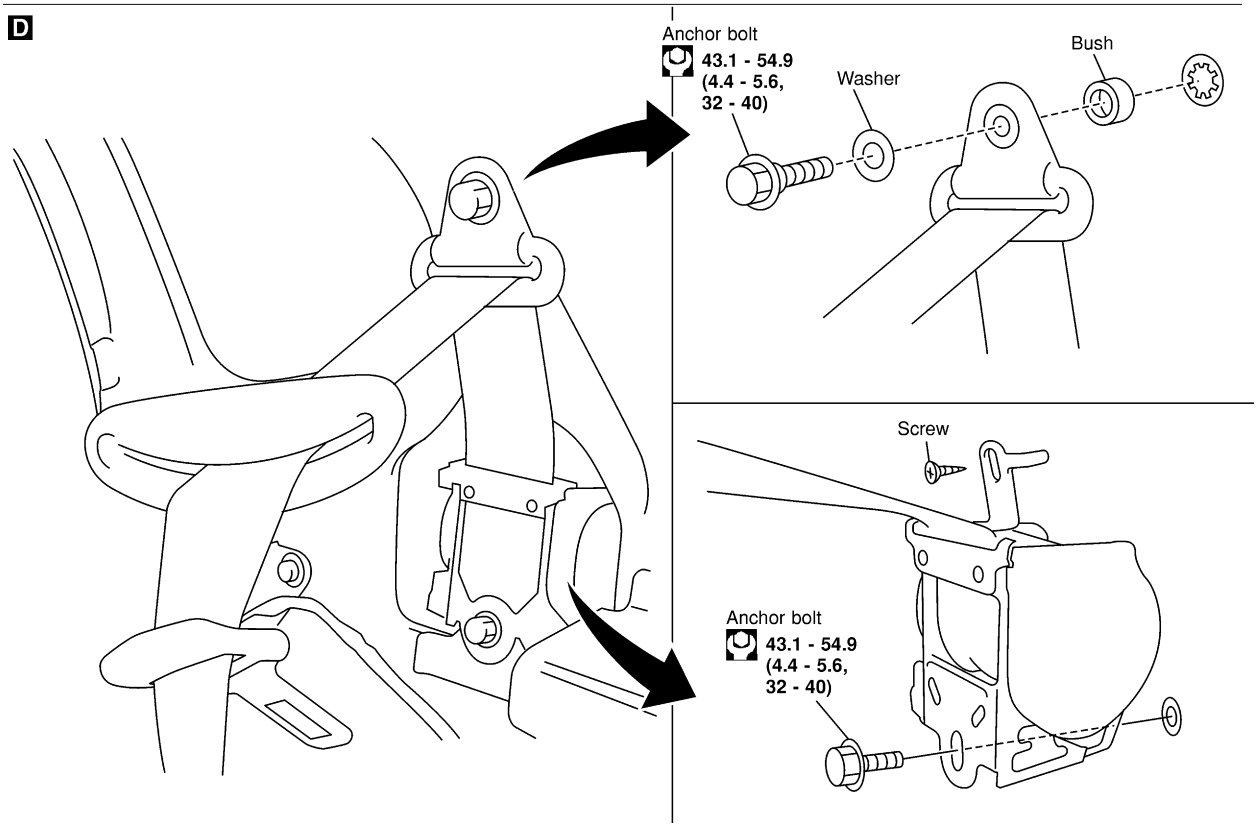
Anchor bolt
43.1 - 54.9
(4.4 - 5.6,
32 - 40)
Washer
Bush
Screw
Anchor bolt
43.1 - 54.9
(4.4 - 5.6,
32 - 40)

NRS130

Precautions

SUPPLEMENTAL RESTRAINT SYSTEM (SRS) “AIR BAG” AND “SEAT BELT PRE-TENSIONER”

NLRS0006

The Supplemental Restraint System such as “AIR BAG” and “SEAT BELT PRE-TENSIONER” used along with a seat belt, helps to reduce the risk or severity of injury to the driver and front passenger for certain types of collision. The SRS composition which is available to NISSAN MODEL V10 is as follows (The composition varies according to the destination and optional equipment.):

- For a frontal collision
  The Supplemental Restraint System consists of driver air bag module (located in the center of the steering wheel), front passenger air bag module (located on the instrument panel on passenger side), front seat belt pre-tensioners, a diagnosis sensor unit, warning lamp, wiring harness and spiral cable.
- For a side collision
  The Supplemental Restraint System consists of front side air bag module (located in the outer side of front seat), side air bag (satellite) sensor, diagnosis sensor unit (one of components of air bags for a frontal collision), wiring harness, warning lamp (one of components of air bags for a frontal collision).

WARNING:

- **To avoid rendering the SRS inoperative, which could increase the risk of personal injury or death in the event of a collision which would result in air bag inflation, all maintenance should be performed by an authorized NISSAN dealer.**
- **Improper maintenance, including incorrect removal and installation of the SRS, can lead to personal injury caused by unintentional activation of the system.**
- **Do not use electrical test equipment on any circuit related to the SRS unless instructed to in this Service Manual. Spiral cable and wiring harnesses covered with yellow insulation tape either just before the harness connectors or for the complete harness are related to the SRS.**

PRECAUTIONS FOR SRS “AIR BAG” AND “SEAT BELT PRE-TENSIONER” SERVICE

NLRS0007

- Do not use electrical test equipment to check SRS circuits unless instructed to in this Service Manual.
- Before servicing the SRS, turn ignition switch “OFF”, disconnect both battery cables and wait at least 3 minutes.
  For approximately 3 minutes after the cables are removed, it is still possible for the air bag and seat belt pre-tensioner to deploy. Therefore, do not work on any SRS connectors or wires until at least 3 minutes have passed.
- Diagnosis sensor unit must always be installed with their arrow marks “⇐” pointing towards the front of the vehicle for proper operation. Also check diagnosis sensor unit for cracks, deformities or rust before installation and replace as required.
- The spiral cable must be aligned with the neutral position since its rotations are limited. Do not attempt to turn steering wheel or column after removal of steering gear.
- Handle air bag module carefully. Always place driver and front passenger air bag modules with the pad side facing upward and place front side air bag module (built-in type) standing with stud bolt side setting bottom.
- Conduct self-diagnosis to check entire SRS for proper function after replacing any components.
- After air bag inflates, the front instrument panel assembly should be replaced if damaged.

WIRING DIAGRAMS AND TROUBLE DIAGNOSIS

NLRS0008

When you read wiring diagrams, refer to the following:

- GI-11, “HOW TO READ WIRING DIAGRAMS”
- EL-12, “POWER SUPPLY ROUTING” for power distribution circuit

When you perform trouble diagnosis, refer to the following:

- GI-32, “HOW TO FOLLOW TEST GROUPS IN TROUBLE DIAGNOSIS”
- GI-21, “HOW TO PERFORM EFFICIENT DIAGNOSES FOR AN ELECTRICAL INCIDENT”

Preparation

SPECIAL SERVICE TOOLS

=NLRS0009

Tool number Tool name	Description
KV99106400 Deployment tool	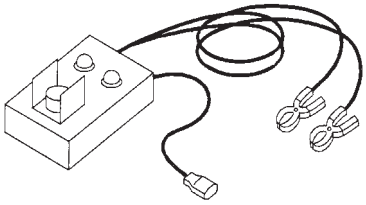 NT357 Disposing of air bag module
KV99105300 Air bag module bracket	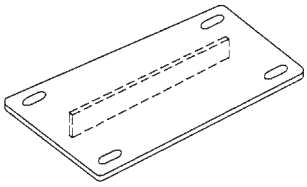 NT354 Anchoring air bag module
HT61961000 and HT62152000 combined *Special torx bit	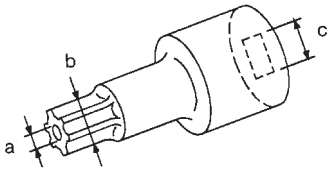 NT361 Use for special bolts [TAMPER RESISTANT TORX (Size T50)] **a: 3.5 (0.138) dia.** **b: 8.5 - 8.6 (0.335 - 0.339) dia.** **c: approx. 10 (0.39) sq.** Unit: mm (in)
KV99108300 Deployment tool adapter for front passenger air bag	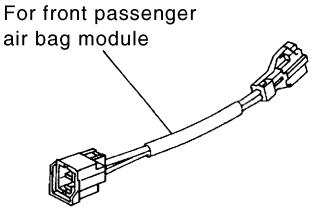 YRS115
KV99109700 Deployment tool adapter for front driver air bag Deployment tool adapter for front seat belt pre-tensioner	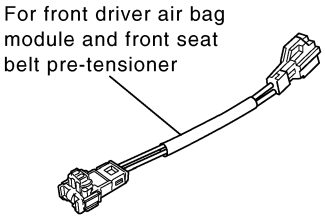 YRS114

*: Special tool or commercial equivalent

COMMERCIAL SERVICE TOOL

NLRS0040

Tool name	Description
Tamper resistant torx socket	Size: T30 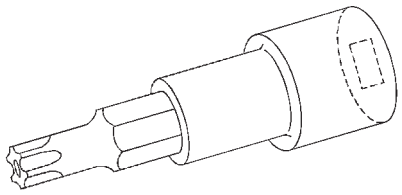 NT757

SRS Configuration

NLRS0010

SRS configurations vary with vehicle depending on the optional equipment and destination.

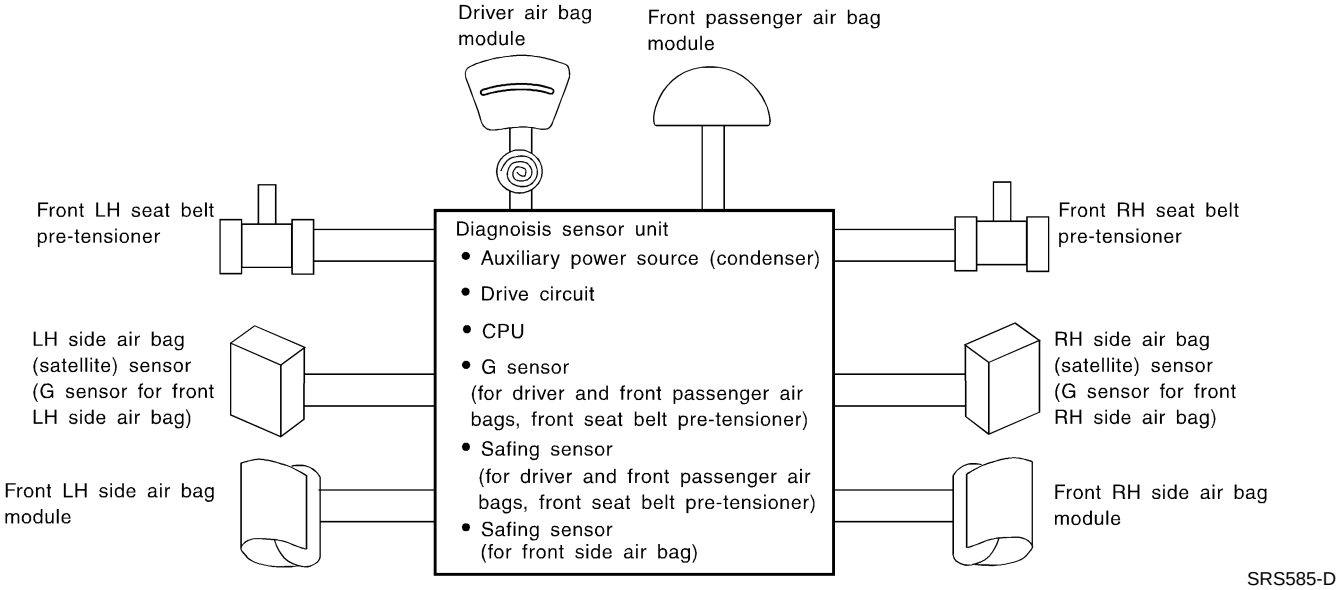

The air bag deploys if the diagnosis sensor unit activates while the ignition switch is in the "ON" or "START" position.
The collision modes for which supplemental restraint systems are activated are different among the SRS systems. For example, the driver air bag module and front passenger air bag module are activated in a frontal collision but not in a side collision.
SRS configurations which are activated for some collision modes are as follows:

SRS configuration	Frontal collision	Left side collision	Right side collision
Driver air bag module	○	—	—
Front passenger air bag module	○	—	—
Front LH seat belt pre-tensioner	○	—	—
Front RH seat belt pre-tensioner	○	—	—
Front LH side air bag module	—	○	—
Front RH side air bag module	—	—	○

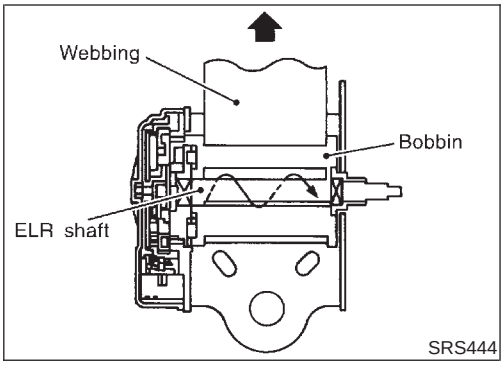

Seat Belt Pre-tensioner with Load Limiter

=NLRS0034

The seat belt pre-tensioner system with load limiter is installed to both the driver's seat and the front passenger's seat. It operates simultaneously with the SRS air bag system in the event of a frontal collision with an impact exceeding a specified level.

When the frontal collision with an impact exceeding a specified level occurs, seat belt slack resulting from clothing or other factors is immediately taken up by the pre-tensioner. Vehicle passengers are securely restrained.

When passengers in a vehicle are thrown forward in a collision and the restraining force of the seat belt exceeds a specified level, the load limiter permits the specified extension of the seat belt by the twisting of the ELR shaft, and a relaxation of the chest-area seat belt web tension while maintaining force.

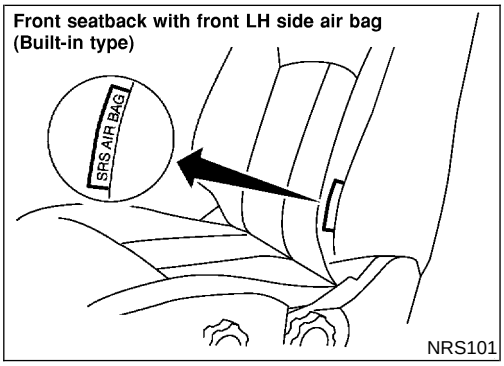

Built-in Type Side Air Bag

NLRS0035

Front side air bag is built-in type.

The front seat backs with built-in type front side air bag have the labels shown in figure at left.

SRS Component Parts Location

NLRS0011

SEC. 240•251•253•480•868•870
SRS configurations vary with vehicle depending on the destination and optional equipment.

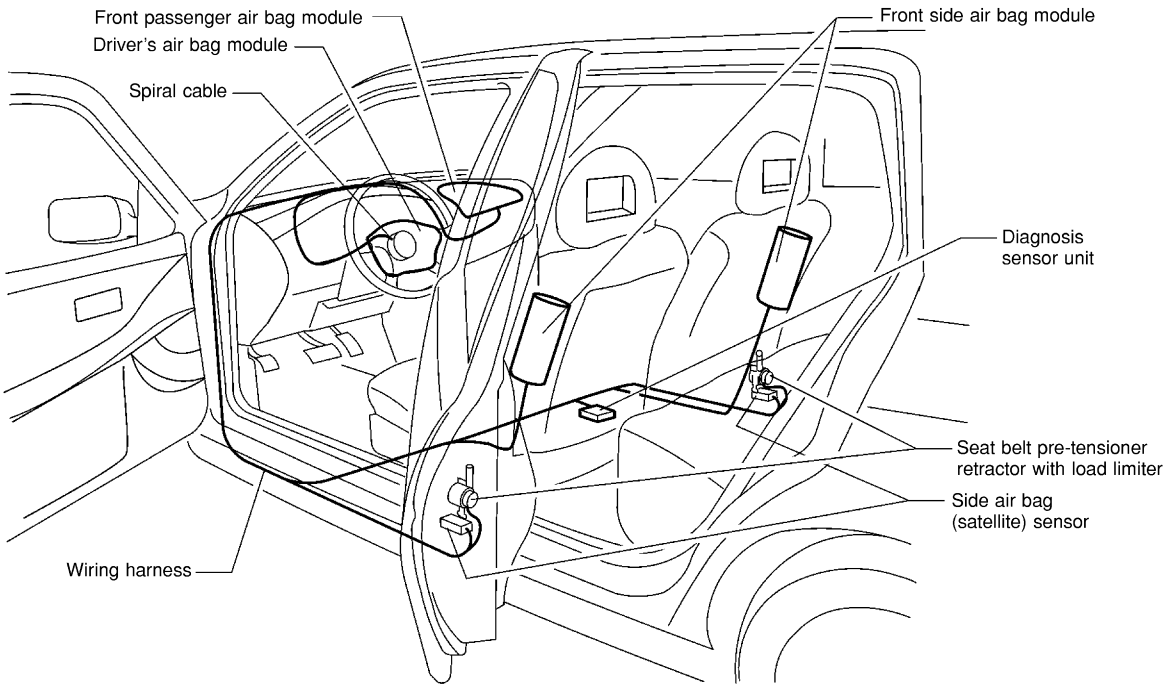

NRS102

SRS797-A

Maintenance Items

NLRS0012

CAUTION:
Do not use electrical test equipment to check SRS circuit.

1. Check operation of "AIR BAG" warning lamp.
   After turning ignition key to "ON" position, "AIR BAG" warning lamp illuminates. The "AIR BAG" warning lamp will go off after about 7 seconds if no malfunction is detected. If any of the following "AIR BAG" warning lamp conditions occur, immediately check the air bag system. Refer to RS-43 for details.

- The "AIR BAG" warning lamp does not illuminate when the ignition switch is turned "ON".
- The "AIR BAG" warning lamp does not go off about 7 seconds after the ignition switch is turned "ON".
- The "AIR BAG" warning lamp blinks after about 7 seconds after the ignition switch is turned "ON".

2. Visually check SRS components.

1) Diagnosis sensor unit

- Check diagnosis sensor unit and bracket for dents, cracks and deformities.
- Check connectors for damage, and terminals for deformities.

2) Air bag module and steering wheel

- Remove air bag module from steering wheel, instrument panel

or seatback. Check harness cover and connectors for damage, terminals for deformities, and harness for binding.

- Install driver air bag module to steering wheel to check fit or alignment with the wheel.
- Check steering wheel for excessive free play.
- Install front passenger air bag module to instrument panel to check fit or alignment with the instrument panel.
- Install front side air bag module to seatback to check fit and alignment with the seat.

3) Spiral cable

- Check spiral cable for dents, cracks, or deformities.
- Check connectors and protective tape for damage.
- Check steering wheel for noise, binding or heavy operation.

4) Main harness, body harness, side air bag module sub-harness

- Check connectors for poor connections, damage, and terminals for deformities.
- Check harnesses for binding, chafing or cut.

5) Front seat belt pre-tensioner

- Check harness cover and connectors for damage, terminals for deformities, and harness for binding.
- Check belts for damage and anchors for loose mounting.
- Check retractor for smooth operation.
- Perform self-diagnosis for seat belt pre-tensioner using "AIR BAG" warning lamp or CONSULT-II.
  Refer to "SRS Operation Check" for details. (RS-43)

6) Side air bag (satellite) sensor

- Check side air bag (satellite) sensor (including bracket portion) for dents, cracks or deformities.
- Check connectors for damage, and terminals for deformities.

CAUTION:
Replace previously used special bolts and ground bolt with new ones.

Diagnosis Sensor Unit

REMOVAL AND INSTALLATION

NLRS0013

CAUTION:

- **Before servicing SRS, turn the ignition switch off, disconnect both battery cables and wait at least 3 minutes.**
- **The special bolts are coated with bonding agent while the other bolt is for ground. Do not use old bolts after removal; replace with new ones.**
- **Check diagnosis sensor unit for proper installation.**
- **Check diagnosis sensor unit to ensure it is free of deformities, dents, cracks or rust. If they show any visible signs of damage, replace them with new ones.**
- **Check diagnosis sensor unit brackets to ensure they are free of deformities or rust.**
- **Replace diagnosis sensor unit if it has been dropped or sustained an impact.**
- **After replacement of diagnosis sensor unit, perform self-diagnosis for SRS. Refer to "SRS Operation Check" for details. (RS-43)**

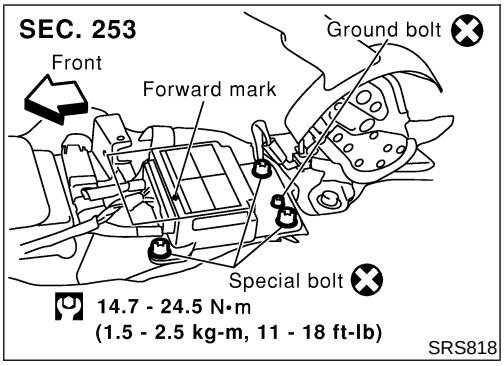

1. Disconnect driver, front passenger and front side air bag module connectors. Also, disconnect front seat belt pre-tensioner connector.
2. Remove console box. Refer to BT-22, " INSTRUMENT PANEL ASSEMBLY".
3. Disconnect diagnosis sensor unit connector.
4. Remove ground bolt and also remove special bolts using the TAMPER RESISTANT TORX (Size T50), from diagnosis sensor unit.
   Then remove the diagnosis sensor unit.

NOTE:
- To install, reverse the removal procedure sequence.

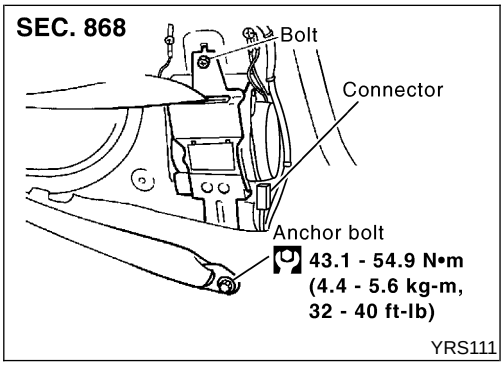

Front Seat Belt Pre-tensioner

REMOVAL AND INSTALLATION

NLRS0036

CAUTION:
- **Before servicing SRS, turn the ignition switch off, disconnect both battery cables and wait at least 3 minutes.**
- **Check front seat front belt pre-tensioner with load limiter for proper installation.**
- **After replacement of front seat belt pre-tensioner, check SRS function and perform self-diagnosis for SRS.**
  Refer to "SRS Operation Check" for details. (RS-43)
- **Do not attempt to disassemble front seat belt pre-tensioner with load limiter.**
- **Replace front seat belt pre-tensioner if it has been dropped or sustained an impact.**
- **Do not expose front seat belt pre-tensioner to temperatures exceeding 80°C (176°F).**

For removal of front seat belt pre-tensioner, refer to "Front Seat Belt" for details. (RS-5)

NOTE:
- **To install, reverse the removal procedure sequence.**

Side Air Bag (Satellite) Sensor

REMOVAL AND INSTALLATION

=NLRS0014

CAUTION:

- **Before servicing SRS, turn the ignition switch off, disconnect both battery cables and wait at least 3 minutes.**
- **Do not use old bolts coated with bonding agent after removal; replace with new ones.**
- **Check side air bag (satellite) sensor for proper installation.**
- **Check side air bag (satellite) sensor to ensure they are free of deformities, dents, cracks or rust. If it shows any visible signs of damage, replace it with new one.**
- **After replacement of side air bag (satellite) sensor, check SRS function and perform self-diagnosis for SRS. Refer to "SRS Operation Check" for details. (RS-43)**
- **Do not attempt to disassemble side air bag (satellite) sensor.**
- **Replace side air bag (satellite) sensor if it has been dropped or sustained an impact.**

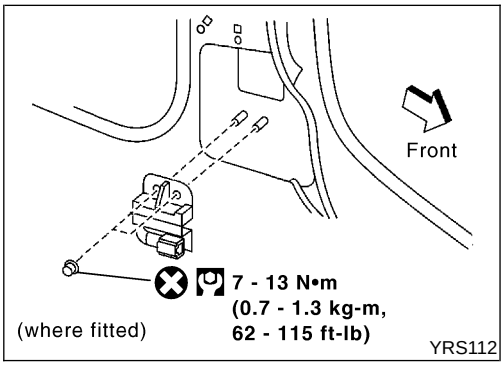

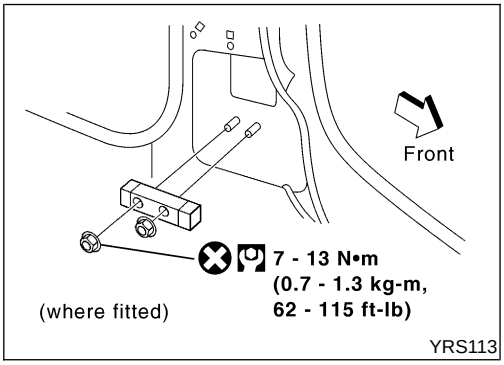

1. Remove front seat belt pre-tensioner. Refer to "Front Seat Belt" for details. (RS-5)
2. Disconnect side air bag (satellite) sensor connector.
3. Remove bolt from side air bag (satellite) sensor unit. Then remove the (satellite) sensor.

NOTE:

- To install, reverse the removal procedure sequence.

Driver Air Bag Module and Spiral Cable

REMOVAL AND INSTALLATION

NLRS0015

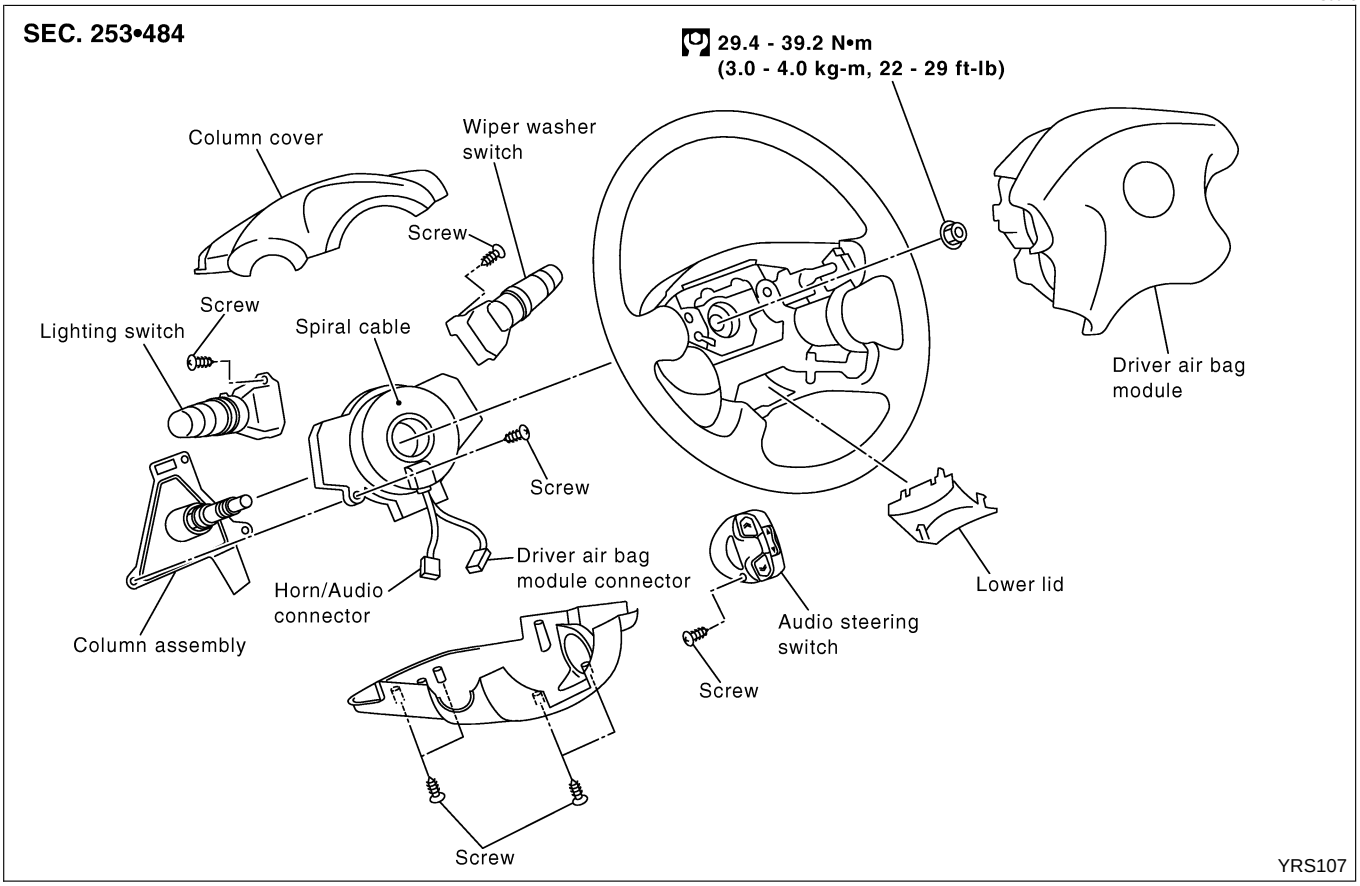

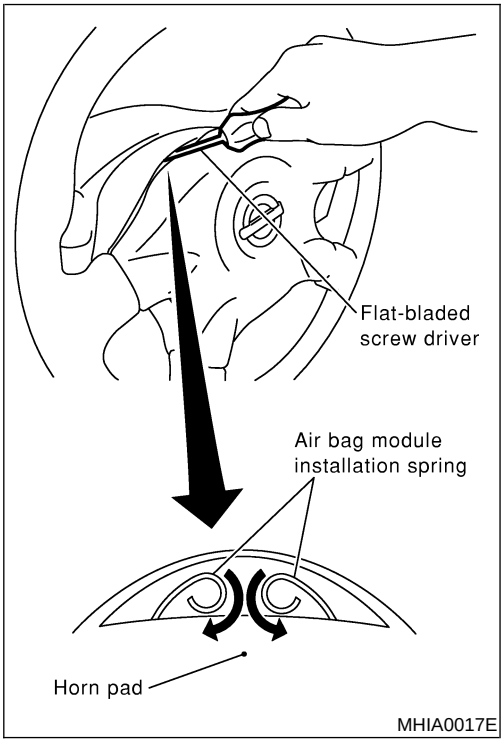

REMOVAL

NLRS0016

CAUTION:

- **Before servicing SRS, turn the ignition switch off, disconnect both battery cables and wait at least 3 minutes.**
- **Always work from the side of driver air bag module.**

1. Push the top of horn pad downward.
2. Rotate the air bag module installation spring to inner direction with a flat-bladed screwdriver, remove air bag module.
3. Disconnect the air bag harness connector. Then remove driver air bag module.

CAUTION:

When removal of driver air bag module connector, insert the lock using flat-bladed driver with cloth. Then push up the lock.

4. Disconnect the horn connector.

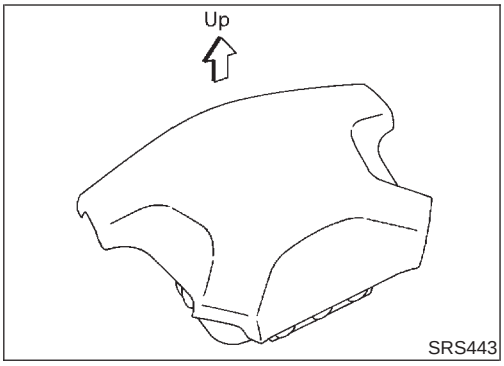

SRS443

CAUTION:
- **Always place driver air bag module with pad side facing upward.**
- **Do not attempt to disassemble driver air bag module.**
- **Do not insert any foreign objects (screwdriver, etc.) into driver air bag module connector.**

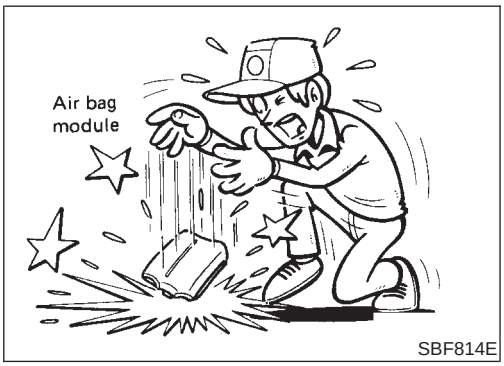

SBF814E

- **Replace driver air bag module if it has been dropped or sustained an impact.**
- **Do not expose the driver air bag module to temperatures exceeding 90°C (194°F).**
- **Do not allow oil, grease or water to come in contact with the driver air bag module.**

5. Set steering wheel in the neutral position.
6. Remove the lower lid. Disconnect horn connector (or horn/audio connector).
7. Remove the column cover.

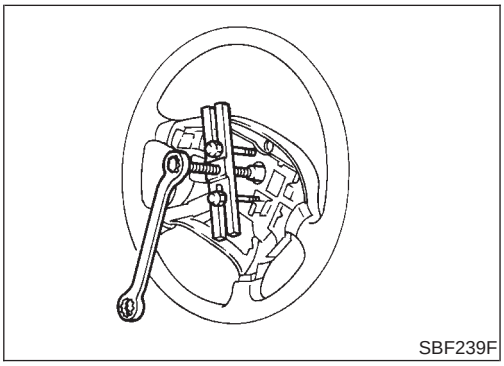
SBF239F

8. Remove steering wheel with steering wheel puller. Be careful not to over-tighten puller on steering wheel.
9. Remove the spiral cable fixing screws, and disconnect spiral cable connector, remove the spiral cable.

CAUTION:
- **Do not attempt to disassemble spiral cable.**
- **Do not apply lubricant to the spiral cable.**

10. Remove the wiper washer switch and lighting switch from the spiral cable.

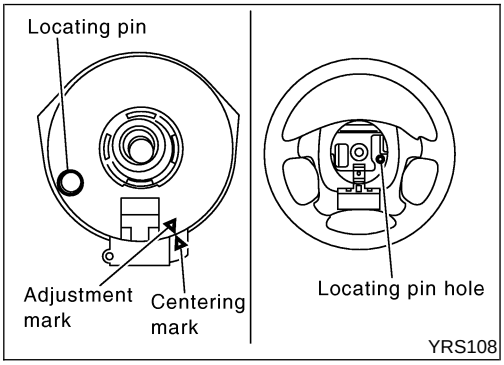

YRS108

CAUTION:
- **The spiral cable may snap due to steering operation if the cable is installed in an improper position.**
- **Also, with the steering linkage disconnectedly cable may snap by turning the steering wheel beyond the limited number of turns. The spiral cable can be turned to the left about 2.5 turns from the right end position.**

INSTALLATION

NLRS0017

1. To install, reverse the removal procedure sequence.
2. For installing the air bag module, the center of the horn pad pressed to make the contacts (RH/LH) ON.

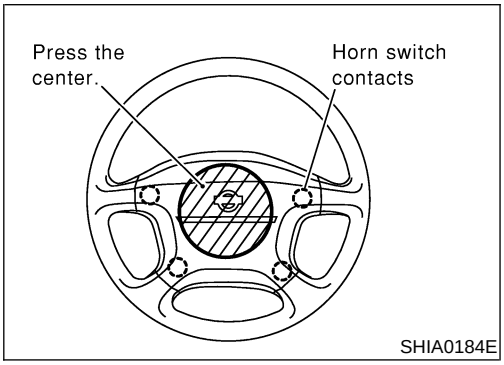

SHIA0184E

3. After the work is completed, perform self-diagnosis to check that no malfunction is detected. Refer to RS-43, "SRS Operation Check".

COMPONENTS INSPECTION

NLRS0065

1. Remove spiral cable connectors.
2. Check continuity between spiral cable harness connector M91 terminal 1, 2 and M306 terminal 10, 11.

Terminal	Continuity
1 - 10	Should exist
2 - 11	

Front Passenger Air Bag Module

REMOVAL

NLRS0018

CAUTION:

Before servicing SRS, turn the ignition switch off, disconnect both battery cables and wait for at least 3 minutes.
Always work from the side of (or under) front passenger air bag module.

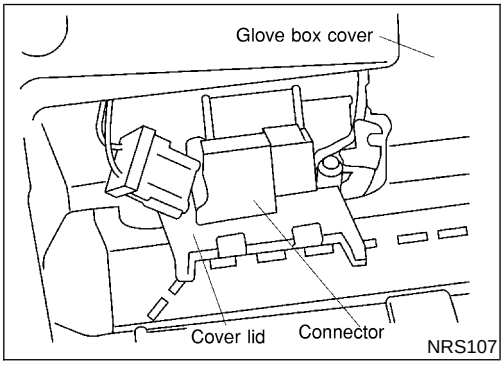

1. Remove glove box assembly. Refer to BT-22, "INSTRUMENT PANEL ASSEMBLY" for details.
2. Use tool to open the connector cover lid.
3. Disconnect front passenger air bag module connector from air bag harness connector.

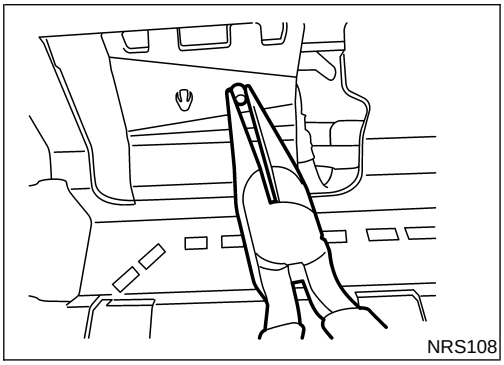

4. Remove front passenger air bag module connector from connector cover lid then remove glove box cover.

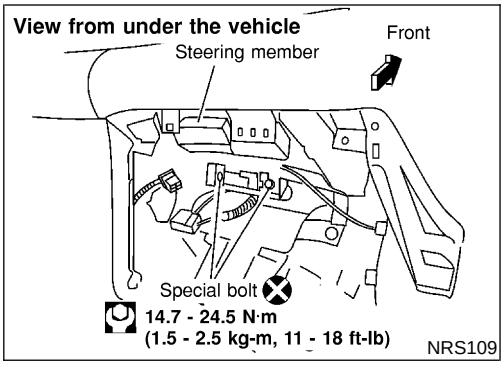

5. Remove the special bolts using the TAMPER RESISTANT TORX (Size T50) from front passenger air bag module.
   Take out the front passenger air bag module from the instrument panel.
   The front passenger air bag module is heavy and should be supported using both hands during removal.

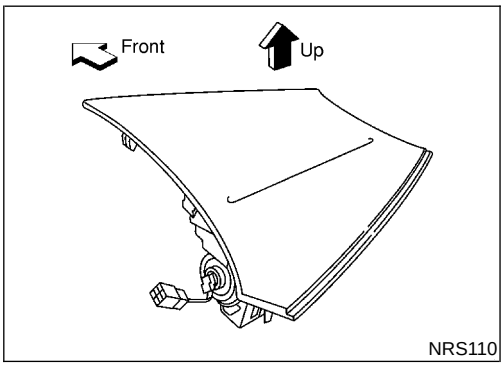

CAUTION:

- **Always place front passenger air bag module with pad side facing upward.**
- **Do not attempt to disassemble front passenger air bag module.**
- **The special bolts are coated with bonding agent. Do not use old bolts after removal; replace with new coated bolts.**
- **Do not insert any foreign objects (screwdriver, etc.) into front passenger air bag module connector.**

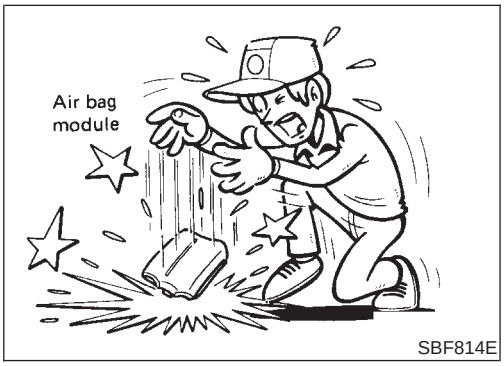

- **Replace front passenger air bag module if it has been dropped or sustained an impact.**
- **Do not expose the front passenger air bag module to temperatures exceeding 90°C (194°F).**
- **Do not allow oil, grease or water to come in contact with the front passenger air bag module.**
- **After front passenger air bag inflates, the front instrument panel assembly should be replaced if damaged.**

INSTALLATION

NLRS0019

CAUTION:

- **Always work from the side of or under front passenger air bag module.**

1. Install front passenger air bag module on the steering member and secure with new special bolts.
   - Ensure harness is not caught between rear of front passenger air bag module and steering member.

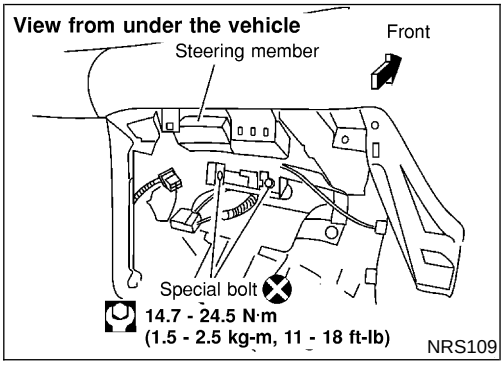

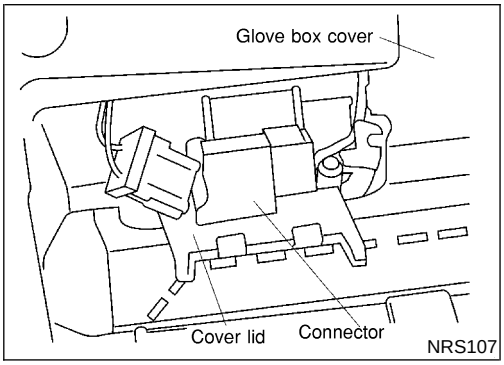

2. Put the front passenger air bag module connector and air bag harness connector through the opening of the glove box cover.
3. Install glove box cover.
4. Attach the front passenger air bag module connector to the connector cover lid.
5. Install glove box assembly. (Glove box is open.)
   Refer to BT-22, "INSTRUMENT PANEL ASSEMBLY" for details.

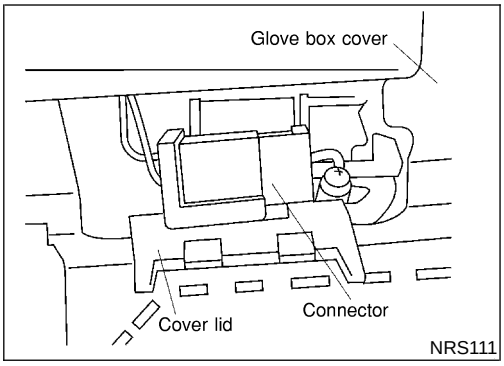

6. Connect front passenger air bag module connector to air bag harness connector.
7. Close the connector cover lid.
8. Close glove box.
9. Connect both battery cable.
10. Conduct self diagnosis to ensure entire SRS operates properly. (use CONSULT-II or warning lamp check.)

Front Side Air Bag Module

REMOVAL

NLRS0059

CAUTION:

- **Before servicing SRS, turn the ignition switch OFF, disconnect both battery cables and wait at least 3 minutes.**
- **Always work from the rear of the front side air bag module.**

1. Remove the front seat.
2. Open the seatback zipper.

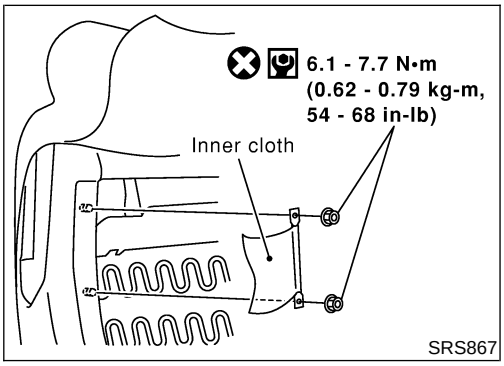

3. Pull up the seatback trim.
4. Remove the nuts coated with bonding agent, securing front side air bag and the inner cloth with seatback frame.

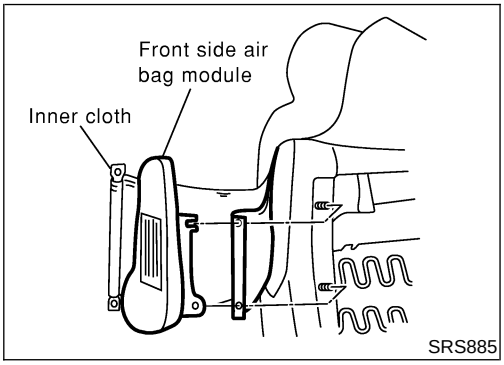

5. Remove inner cloth.
6. Remove front side air bag module with air bag harness.

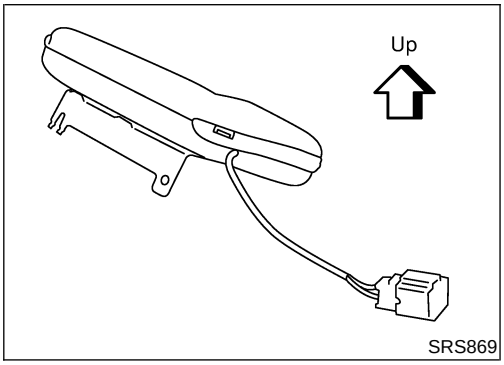

CAUTION:

- **Always place the front side air bag module standing with the stud bolt side setting bottom.**
- **Do not attempt to disassemble front side air bag module.**
- **Do not use old nuts after removal; replace with new nuts.**
- **Do not insert any foreign objects (screwdriver, etc.) into front side air bag module connector.**

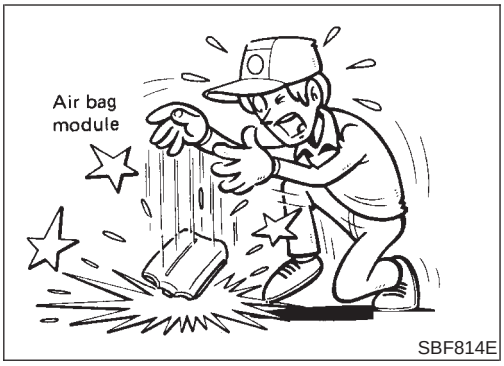

- **Replace front side air bag module if it has been dropped or sustained an impact.**
- **Do not expose the front side air bag module to temperatures exceeding 90°C (194°F).**
- **Do not allow oil, grease or water to come in contact with the front side air bag module.**
- **After front side air bag inflates, all parts of front seatback (including front seatback frame) should be replaced.**

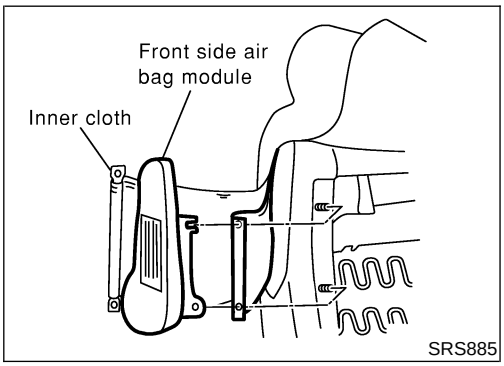

INSTALLATION

NLRS0060

1. Install the seatback trim. Refer to BT-45, "Front Seat".
2. Install front side air bag module on seatback frame.

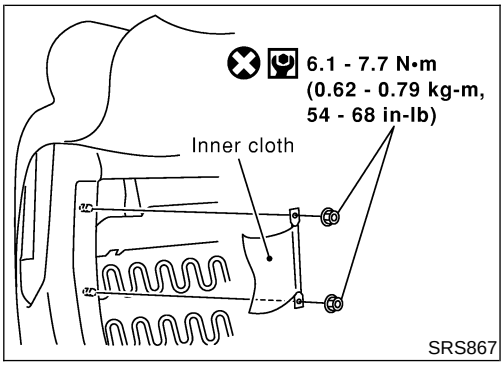

3. Secure the inner cloth which covers the front side air bag module with new nuts.
4. Close the seatback zipper.
5. Install the fornt seat.
6. Connect both battery cables.
7. Go to "SRS Operation Check", RS-43 and perform self-diagnosis to ensure entire SRS operates properly. (Use CONSULT-II or "AIR BAG" warning lamp.)

Disposal of Air Bag Module and Seat Belt Pre-tensioner

NLRS0022

- Before disposing of air bag module and seat belt pre-tensioner, or vehicles equipped with such systems, deploy the systems. If such systems have already been deployed due to an accident, dispose of them as indicated in "DISPOSING OF AIR BAG MODULE AND SEAT BELT PRE-TENSIONER" (RS-35).
- When deploying the air bag module and seat belt pre-tensioner, always use the Special Service Tool; Deployment tool KV99106400.
- When deploying the air bag module and seat belt pre-tensioner, stand at least 5 m (16 ft) away from the deployment component.
- When deploying air bag module and seat belt pre-tensioner, a fairly loud noise is made, followed by smoke being released. The smoke is not poisonous, however, be careful not to inhale smoke since it irritates the throat and can cause choking.
- Always activate one air bag module at a time.
- Due to heat, leave air bag module unattended for more than 30 minutes after deployment. Also leave seat belt pre-tensioner unattended for move than 10 minutes after deployment.
- Be sure to wear gloves when handling a deployed air bag

module and seat belt pre-tensioner.

- Never apply water to the deployed air bag module and seat belt pre-tensioner.
- Wash your hands clean after finishing work.
- Place the vehicle outdoors with an open space of at least 6 m (20 ft) on all sides when deploying air bag module and seat belt pre-tensioner while mounted in vehicle.
- Use a voltmeter to make sure the vehicle battery is fully charged.
- Do not dispose of the air bag module and seat belt pre-tensioner un-deployed.

CHECKING DEPLOYMENT TOOL

NLRS0022S01

Connecting to Battery

NLRS0022S0101

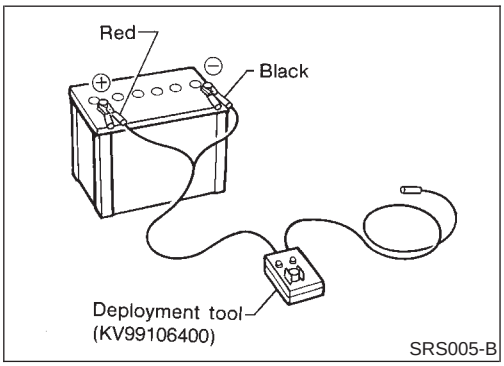

CAUTION:

The battery must show voltage of 9.6V or more.

Remove the battery from the vehicle and place it on dry wood blocks approximately 5 m (16 ft) away from the vehicle.

- Wait 3 minutes after the vehicle battery is disconnected before proceeding.
- Connect red clip of deployment tool to battery positive terminal and black clip to negative terminal.

Make sure the polarity is correct. The right side lamp in the tool, marked "deployment tool power", should glow with a green light. If the right side lamp glows red, reverse the connections to the battery.

Deployment Tool Check

NLRS0022S0102

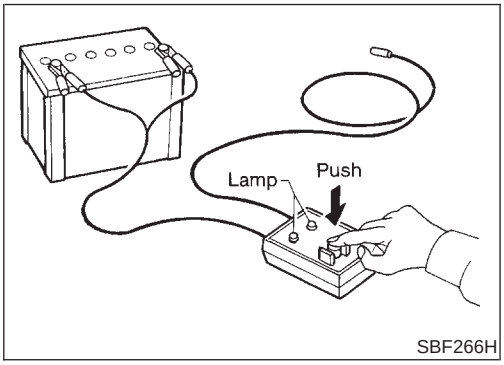

Press the deployment tool switch to the "ON" position. The left side lamp in the tool, marked "air bag connector voltage" should illuminate. If it does not illuminate, replace the tool.

Air Bag Deployment Tool Lamp Illumination Chart (Battery connected)

NLRS0022S0103

Switch operation	Left side lamp, green* "AIR BAG CONNECTOR VOLTAGE"	Right side lamp, green* "DEPLOYMENT TOOL POWER"
OFF	OFF	ON
ON	ON	ON

*: If this lamp glows red, the tool is connected to the battery incorrectly. Reverse the connections and make sure the lamp glows green.

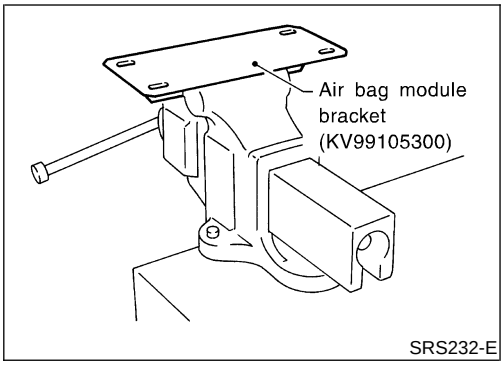

DEPLOYMENT PROCEDURES FOR AIR BAG MODULE (OUTSIDE OF VEHICLE)

NLRS0022S02

Unless the vehicle is being scrapped, deploying the air bag in the vehicle is not recommended. This may cause damage to the vehicle interior.

Anchor air bag module bracket (KV99105300) in a vise secured to a firm foundation during deployment.

Deployment of Driver Air Bag Module (Outside of vehicle)

NLRS0022S0201

1. Using wire, secure driver air bag module to air bag module bracket (SST: KV99105300) at two places.

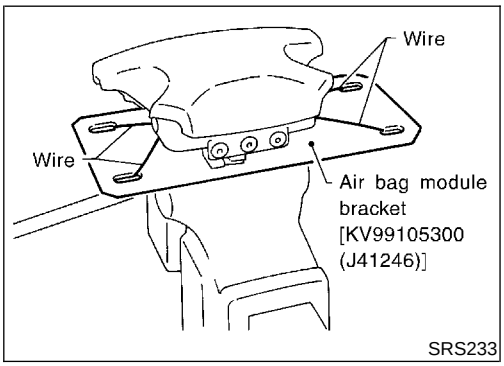

CAUTION:

Use wire of at least 1 mm (0.04 in) diameter.

2. Firmly secure air bag module bracket (SST: KV99105300) with driver air bag module attached, in a vise.

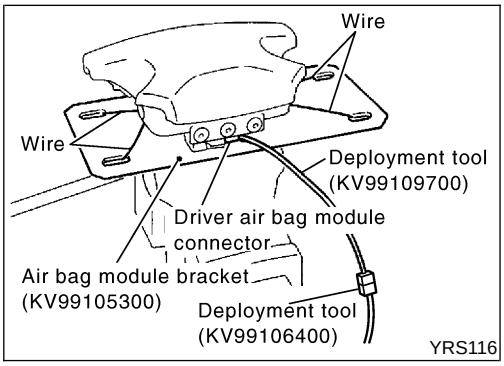

3. Connect deployment tool adapter (KV99109700) to deployment tool (SST: KV99106400) connector and driver air bag module connector.

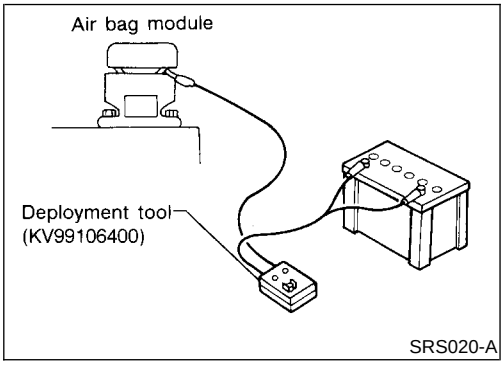

4. Connect red clip of deployment tool to battery positive terminal and black clip to negative terminal.
5. The lamp on the right side of the tool, marked "deployment tool power", should glow green, not red.
6. Press the button on the deployment tool. The left side lamp on the tool, marked "air bag connector voltage", will illuminate and the air bag module will deploy.

CAUTION:

When deploying the driver air bag module, stand at least 5 m (16 ft) away from the driver air bag module.

Deployment of Front Passenger Air Bag Module (Outside of vehicle)

NLRS0022S0202

1. Make an 8.5 mm (0.335 in) diameter hole in air bag module bracket (SST: KV99105300) at the position shown in figure at left.

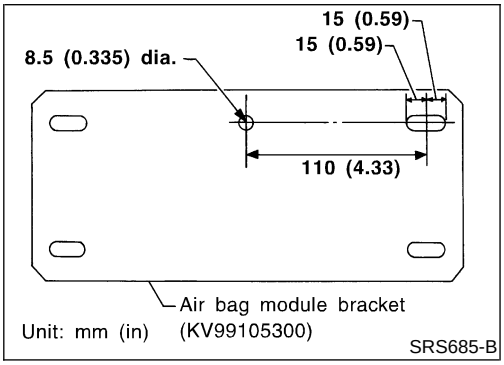

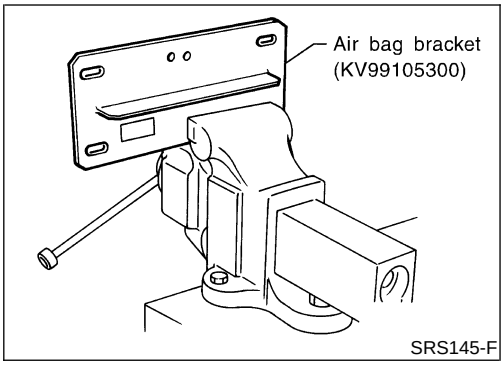

2. Firmly secure air bag module bracket (SST: KV99105300) in a vise.

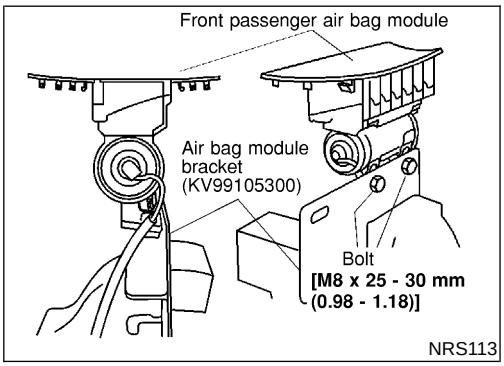

3. Match the two holes in air bag module bracket (held in vise) and front passenger air bag module and fix them with two bolts [M8 × 25 - 30 mm (0.98 - 1.18 in)].

CAUTION:
If a gap exists between front passenger air bag module and air bag module bracket, use a piece of wood inserted in the gap to stabilize the front passenger air bag module.

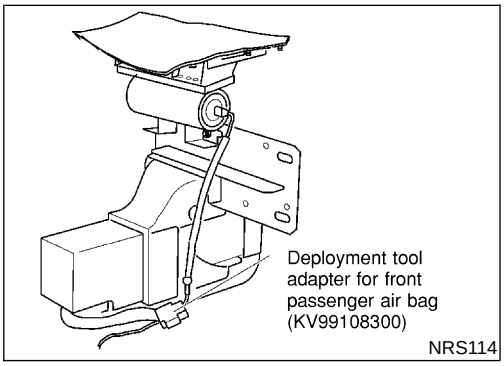

4. Connect deployment tool adapter (SST: KV99108300) to deployment tool (SST: KV99106400) connector and front passenger air bag module connector.
5. Connect red clip of deployment tool to battery positive terminal and black clip to negative terminal.
6. The lamp on the right side of the tool, marked "deployment tool power", should glow green, not red.
7. Press the button on the deployment tool. The left side lamp on the tool, marked "air bag connector voltage", will illuminate and the front passenger air bag module will deploy.

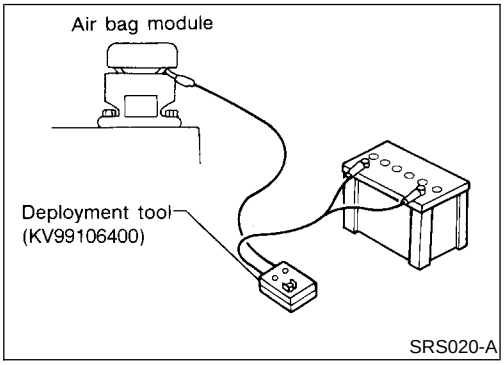

CAUTION:
- **When deploying the front passenger air bag module, do not stand on the deploying side.**
- **Stand at least 5 m (16 ft) away from the front passenger air bag module.**

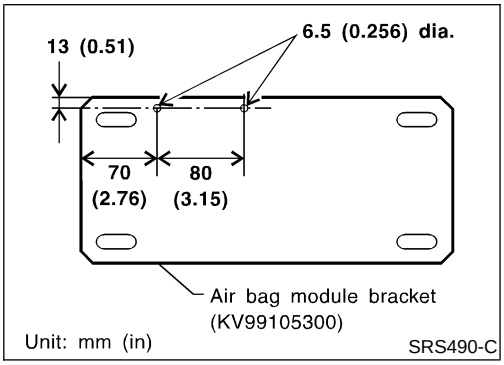

Deployment of Front Side Air Bag Module (Built-in type) (Outside of vehicle)

NLRS0022S0204

1. Make 6.5 mm (0.256 in) diameter holes in air bag module bracket (SST: KV99105300) at the position shown in figure at left.
2. Firmly secure air bag module bracket (SST: KV99105300) in a vise.

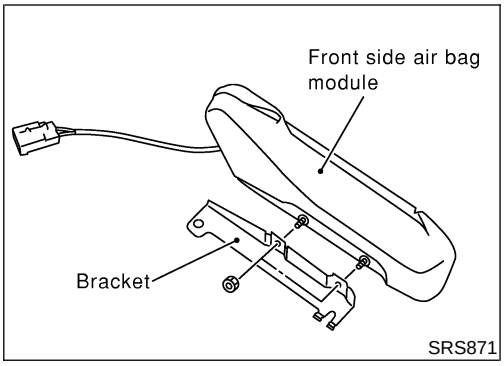

3. Remove nuts then remove the bracket from front side air bag module.

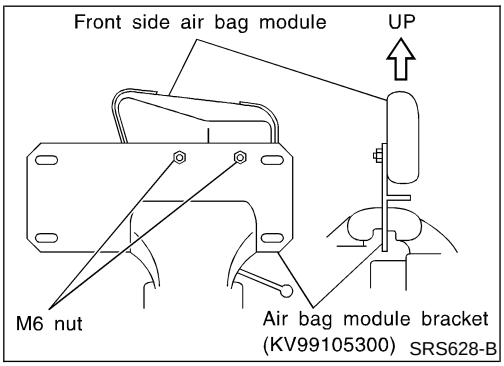

4. Insert the stud bolts of side air bag module into the two holes in air bag module bracket (held in vise) and fix them with two M6 nuts.

CAUTION:
Side air bag module should be secured to air bag module bracket (SST: KV99105300) in a vise with stud bolt side setting bottom.

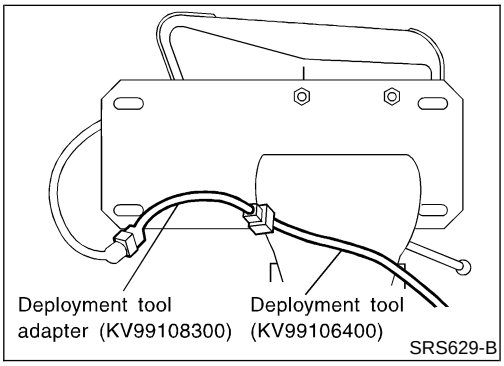

5. Connect deployment tool adapter (SST: KV99108300) to deployment tool (SST: KV99106400) connector and connector on air bag module.

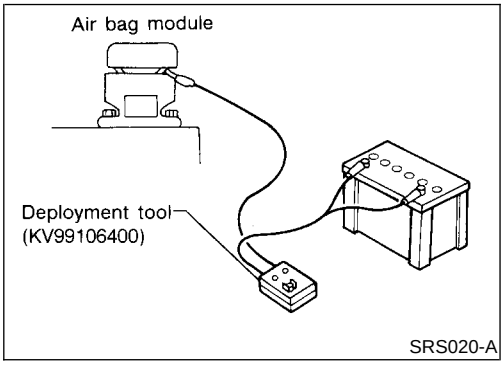

6. Connect red clip of deployment tool to battery positive terminal and black clip to negative terminal.
7. The lamp on the right side of the tool, marked "deployment tool power", should glow green, not red.
8. Press the button on the deployment tool. The left side lamp on the tool, marked "air bag connector voltage", will illuminate and the air bag module will deploy.

CAUTION:
When deploying the air bag module, stand at least 5 m (16 ft) away from the air bag module.

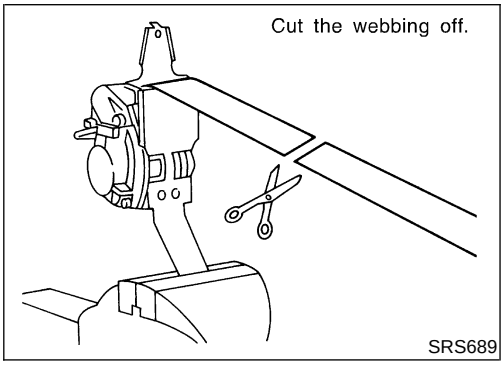

DEPLOYMENT PROCEDURES FOR SEAT BELT PRE-TENSIONER (OUTSIDE OF VEHICLE)

NLRS0022S05

1. Firmly secure front seat belt pre-tensioner in a vise and cut the webbing off.

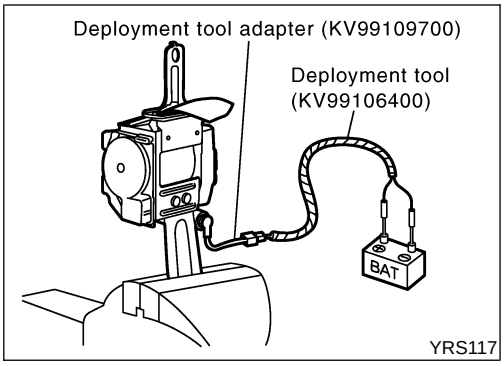

2. Connect deployment tool adapter (SST: KV99109700) to deployment tool (SST: KV99106400) connector and front seat belt pre-tensioner connector.

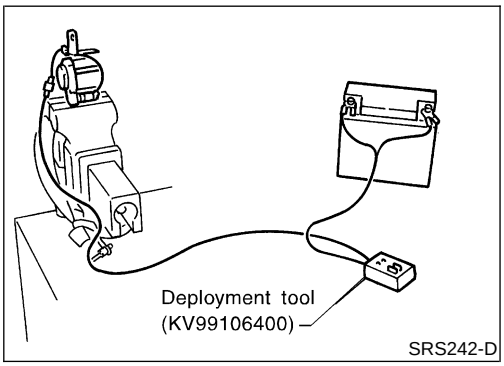

3. Connect red clip of deployment tool to battery positive terminal and black clip to negative terminal.
4. The lamp on the right side of the tool, marked "deployment tool power", should glow green, not red.
5. Press the button on the deployment tool. The left side lamp on the tool, marked "seat belt pre-tensioner connector voltage", will illuminate and the front seat belt pre-tensioner will deploy.

CAUTION:
When deploying the front seat belt pre-tensioner, stand at least 5 m (16 ft) away from the front seat belt pre-tensioner.

DEPLOYMENT OF AIR BAG MODULE AND SEAT BELT PRE-TENSIONER WHILE MOUNTED IN VEHICLE

NLRS0022S03

When disposing of a vehicle, deploy air bag module and seat belt pre-tensioner while they are mounted in vehicle.

CAUTION:
When deploying air bag module or seat belt pre-tensioner, ensure vehicle is empty.

1. Disconnect both the vehicle battery cables and wait 3 minutes.
2. Disconnect air bag module and seat belt pre-tensioner connector.
3. Connect deployment tool (SST: KV99106400)] to air bag module or seat belt pre-tensioner.
   For driver air bag module, attach deployment tool adapter (SST: KV99109700) to the tool connector.
   For front passenger air bag module, attach deployment tool adapter (SST: KV99108300) to the tool connector.
   For side air bag module, attach deployment tool adapter (SST: KV99108300) to the tool connector.
   For seat belt pre-tensioner, attach deployment tool adapter (SST: KV99109700) to the tool connector.

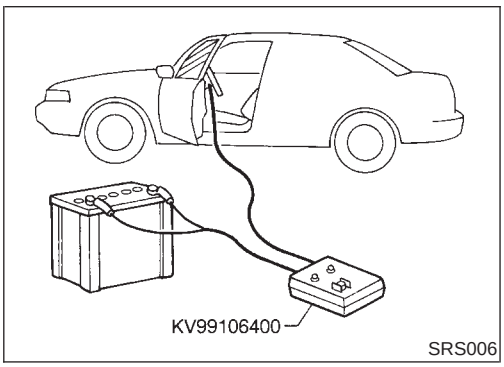

4. Connect red clip of deployment tool to battery positive terminal and black clip to negative terminal.
5. The lamp on the right side of the tool, marked "deployment tool power", should glow green, not red.
6. Press the button on the deployment tool. The left side lamp on the tool, marked "air bag connector voltage", will illuminate and the air bag module or seat belt pre-tensioner will deploy.

CAUTION:
Activate only one air bag module or seat belt pre-tensioner at a time.

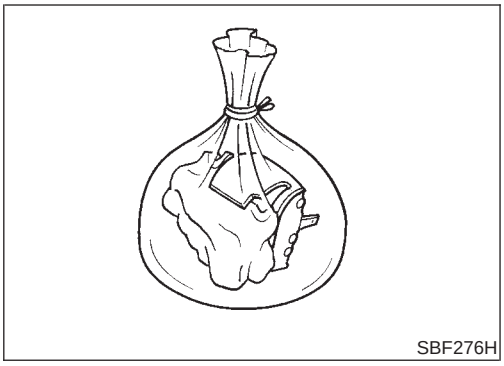
SBF276H

DISPOSING OF AIR BAG MODULE AND SEAT BELT PRE-TENSIONER

NLRS0022S04

Deployed air bag module and seat belt pre-tensioner are very hot. Before disposing of air bag module, and seat belt pre-tensioner wait at least 30 minutes, and 10 minutes, respectively. Seal them in a plastic bag before disposal.

CAUTION:

- **Never apply water to a deployed air bag module and seat belt pre-tensioner.**
- **Be sure to wear gloves when handling a deployed air bag module and seat belt pre-tensioner.**
- **No poisonous gas is produced upon air bag module deployment. However, be careful not to inhale gas since it irritates throat and can cause choking.**
- **Do not attempt to disassemble air bag module and seat belt pre-tensioner.**
- **Air bag module and seat belt pre-tensioner cannot be reused.**
- **Wash your hands clean after finishing work.**

Trouble Diagnoses Introduction

=NLRS0043

CAUTION:

- **Do not use electrical test equipment on any circuit related to the SRS unless instructed to in this Service Manual. Spiral cable and wiring harnesses covered with yellow insulation tape either just before the harness connectors or for the complete harness are related to the SRS.**
- **Do not attempt to repair, splice or modify the SRS wiring harness. If the harness is damaged, replace it with a new one.**
- **Keep ground portion clean.**

DIAGNOSIS FUNCTION

NLRS0043S01

The SRS self-diagnosis results can be read by using “AIR BAG” warning lamp and/or CONSULT-II. The reading of these results is accomplished using one of two modes — “User mode” and “Diagnosis mode”.
The User mode is exclusively prepared for the customer (driver). This mode warns the driver of a system malfunction through the operation of the “AIR BAG” warning lamp.
The Diagnosis mode allows the technician to locate and inspect the malfunctioning part.
The mode applications for the “AIR BAG” warning lamp and CONSULT-II are as follows:

	User mode	Diagnosis mode	Display type
“AIR BAG” warning lamp	X	X	ON-OFF operation
CONSULT-II	—	X	Monitoring

NOTE:
Seat belt pre-tensioner malfunction is indicated by “AIR BAG” warning lamp.

DIAGNOSIS MODE FOR CONSULT-II

NLRS0043S02

- “SELF-DIAG [CURRENT]”
  A current Self-diagnosis result (also indicated by the number of warning lamp flashes in the Diagnosis mode) is displayed on the CONSULT-II screen in real time. This refers to a malfunctioning part requiring repairs.
- “SELF-DIAG [PAST]”
  Diagnosis results previously stored in the memory are displayed on the CONSULT-II screen. The stored results are not erased until memory erasing is executed.
- “TROUBLE DIAG RECORD”
  With TROUBLE DIAG RECORD, diagnosis results previously erased by a reset operation can be displayed on the CONSULT-II screen.
- “ECU DISCRIMINATED NO.”
  The diagnosis sensor unit for each vehicle model is assigned with its own, individual classification number (refer to the table below). This number will be displayed on the CONSULT-II screen. When replacing the diagnosis sensor unit, refer to the part number for the compatibility. After installation, replacement with a correct unit can be checked by confirming this classification number on the CONSULT-II screen.

For NISSAN MODEL V10, the diagnosis sensor unit classification numbers are as follows:

MODEL	ECU DISCRIMINATED NO.
Models with single air bag and seat belt pre-tensioner	A910
Models with dual air bags and seat belt pre-tensioner	A911
Models with dual air bags, side air bag and seat belt pre-tensioner	A912

HOW TO CHANGE SELF-DIAGNOSIS MODE WITH CONSULT-II

=NLRS0043S03

From User Mode to Diagnosis Mode

NLRS0043S0301

After selecting "AIR BAG" on the "SELECT SYSTEM" screen, User mode automatically changes to Diagnosis mode.

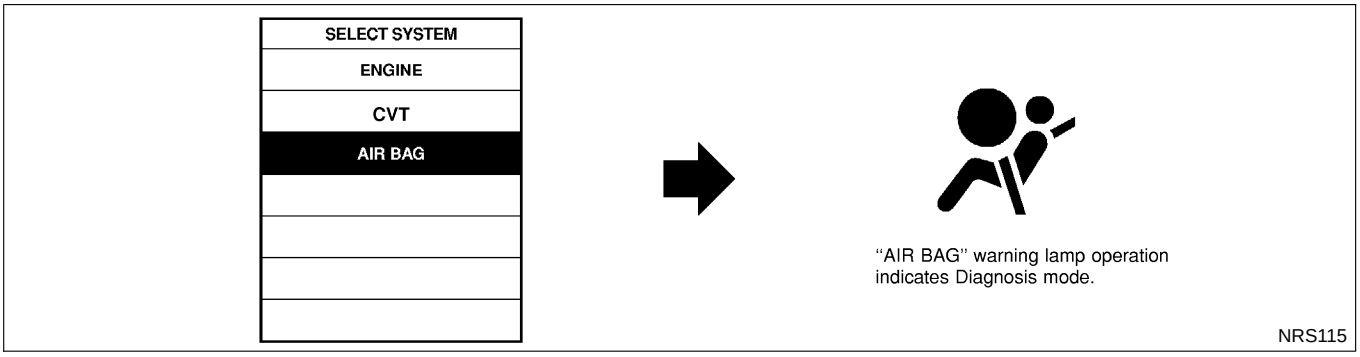

From Diagnosis Mode to User Mode

NLRS0043S0302

To return to User mode from Diagnosis mode, touch "BACK" key of CONSULT-II until "SELECT SYSTEM" appears, Diagnosis mode automatically changes to User mode.

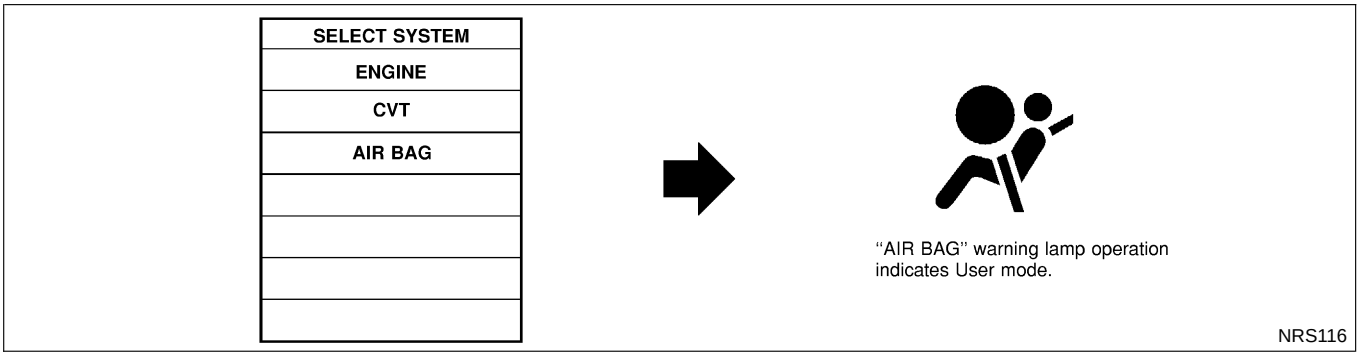

HOW TO CHANGE SELF-DIAGNOSIS MODE WITHOUT CONSULT-II

NLRS0043S04

From User Mode to Diagnosis Mode

NLRS0043S0401

When a malfunction is detected, activate the Diagnosis mode by turning the ignition switch as follows:

1) Turn ignition switch "ON".
2) After "AIR BAG" warning lamp lights for 7 seconds, turn ignition switch "OFF" within 1 second.
3) Wait more than 3 seconds.
4) Repeat steps 1 to 3 three times.
5) Turn ignition switch "ON".

SRS will not enter Diagnosis mode if no malfunction is detected.

From Diagnosis Mode to User Mode

NLRS0043S0402

After a malfunction is repaired, switch the ignition "OFF" for at least one second, then back "ON". Diagnosis mode is returned to User mode.

When a malfunction is detected, switch from Diagnosis mode to User mode by turning the ignition switch as follows:

1) Turn ignition switch "ON".
2) After "AIR BAG" warning lamp lights for 7 seconds, turn ignition switch "OFF" within 1 second.
3) Wait more than 3 seconds.
4) Repeat steps 1 to 3 three times.
5) Turn ignition switch "ON".

HOW TO ERASE SELF-DIAGNOSIS RESULTS

NLRS0043S05

With CONSULT-II

NLRS0043S0501

- "SELF-DIAG [CURRENT]"
  A current Self-diagnosis result is displayed on the CONSULT-II screen in real time.

After the malfunction is repaired completely, no malfunction is detected on "SELF-DIAG [CURRENT]".

- "SELF-DIAG [PAST]"
  Return to the "SELF-DIAG [CURRENT]" CONSULT-II screen by pushing "BACK" key of CONSULT-II and select "SELF-DIAG [CURRENT]" in SELECT DIAG MODE. Touch "ERASE" in "SELF-DIAG [CURRENT]" mode.

NOTE:
If the memory of the malfunction in "SELF-DIAG [PAST]" is not erased, the User mode shows the system malfunction by the operation of the warning lamp even if the malfunction is repaired completely.

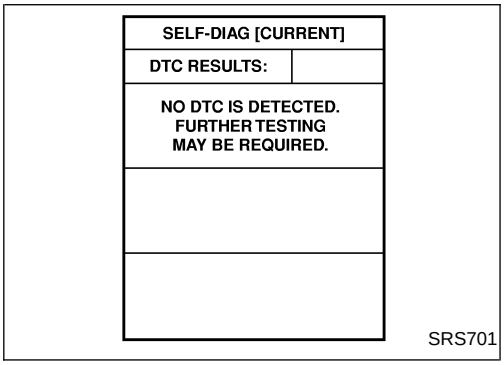

- "TROUBLE DIAG RECORD"
  The memory of "TROUBLE DIAG RECORD" cannot be erased.

Without CONSULT-II

NLRS0043S0502

After a malfunction is repaired, switch the ignition "OFF" for at least one second, then back "ON". Diagnosis mode returns to the User mode. At that time, the self-diagnostic result is cleared.

How to Perform Trouble Diagnoses for Quick and Accurate Repair

=NLRS0044

A good understanding of the malfunction conditions can make troubleshooting faster and more accurate. In general, each customer feels differently about a malfunction. It is important to fully understand the symptoms or conditions for a customer complaint.

INFORMATION FROM CUSTOMER

NLRS0044S01

WHAT ..... Vehicle model
WHEN ..... Date, Frequencies
WHERE ..... Road conditions
HOW ..... Operating conditions, Symptoms

PRELIMINARY CHECK

NLRS0044S02

Check that the following parts are in good order.

- Battery [Refer to SC-3, “BATTERY”.]
- Fuse [Refer to EL-12, “Fuse”, “POWER SUPPLY ROUTING”.]
- System component-to-harness connections

WORK FLOW

=NLRS0044S03

NOTE:
Seat belt pre-tensioner malfunction is indicated by "AIR BAG" warning lamp.

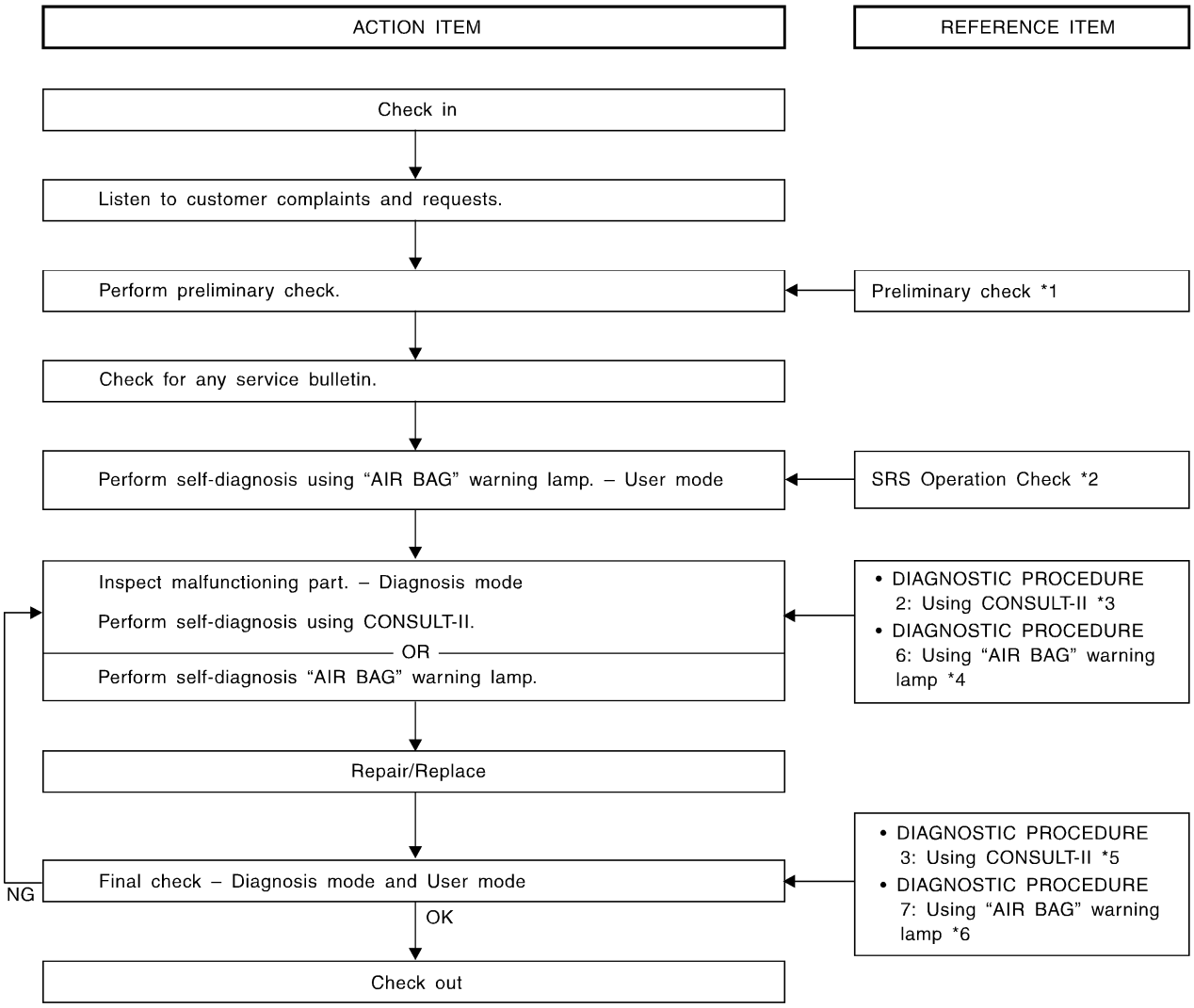

SRS799

*1: RS-39
*2: RS-43
*3: RS-44
*4: RS-53
*5: RS-47
*6: RS-58

Wiring Diagram — SRS —

NLRS0061

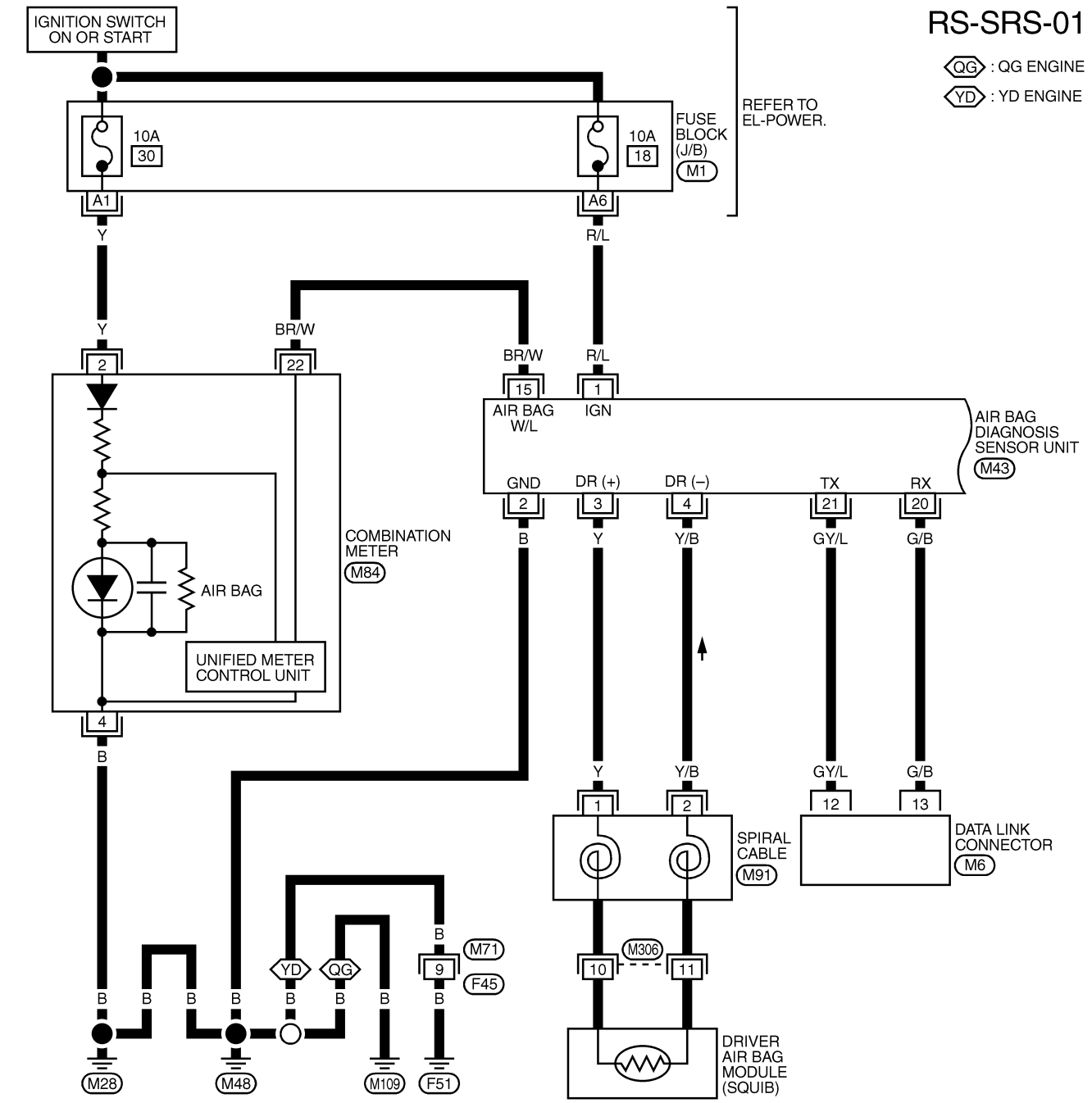

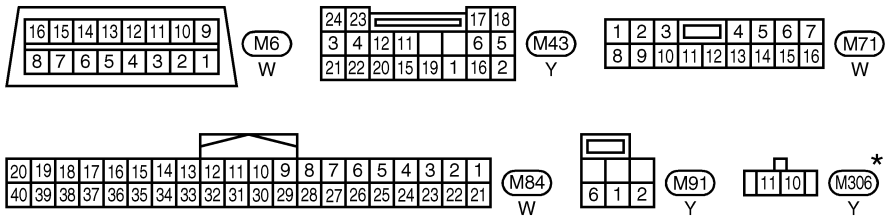

REFER TO THE FOLLOWING.
M1 -FUSE BLOCK-JUNCTION BOX (J/B)

* : THIS CONNECTOR IS NOT SHOWN IN " HARNESS LAYOUT ", EL SECTION.

YRS103A

MODELS WITH FRONT SEAT BELT PRE-TENSIONER B21, B27

NLRS0061S01

RS-SRS-02

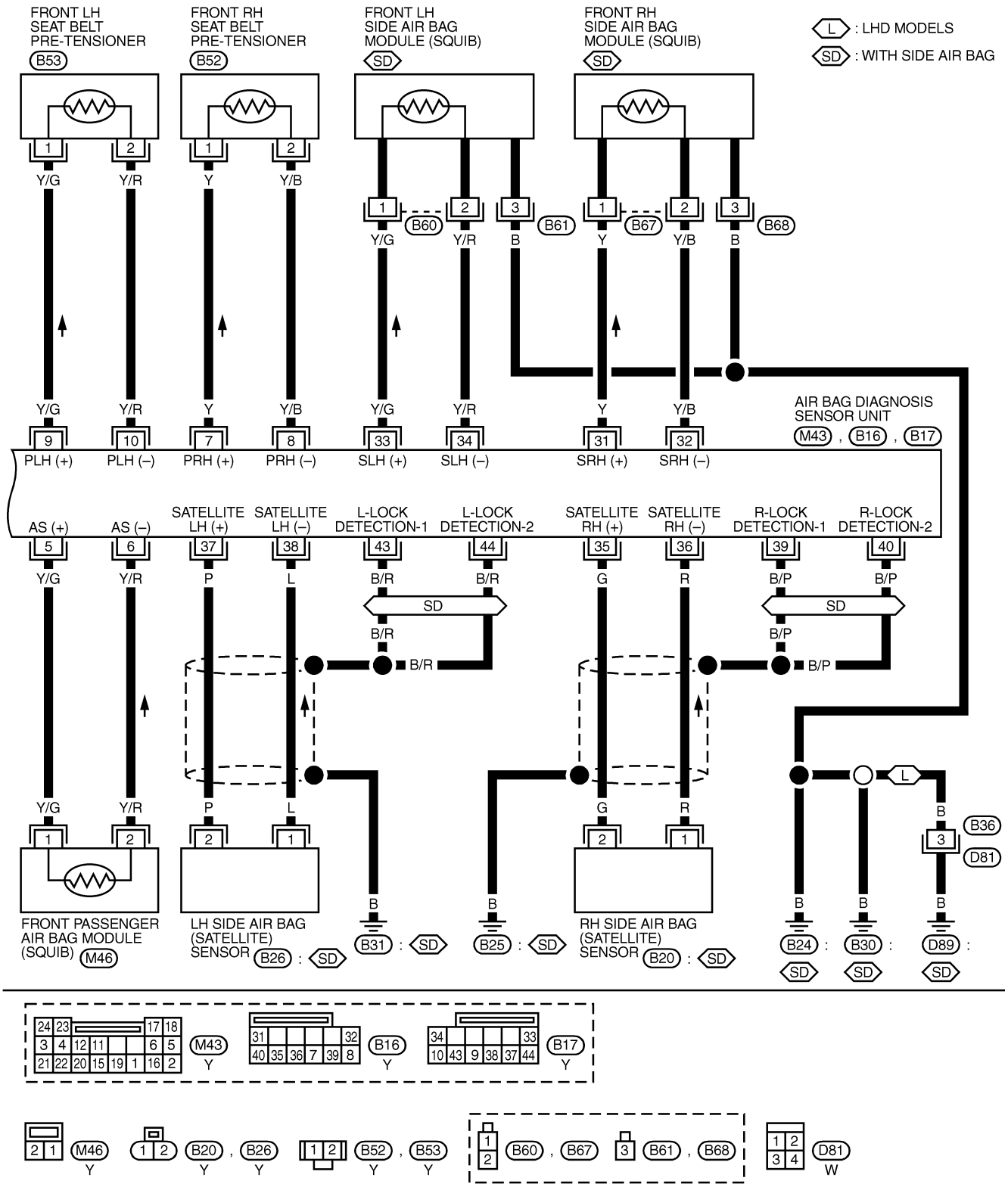

YRS104A

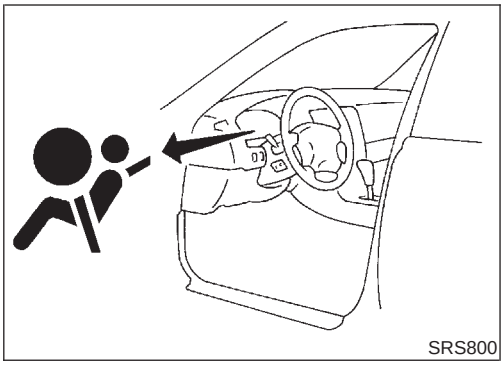

SRS Operation Check

NLRS0047

DIAGNOSTIC PROCEDURE 1

NLRS0047S01

Checking Air Bag Operation by Using "AIR BAG" Warning Lamp — User Mode

NLRS0047S0101

1. After turning ignition switch from "OFF" to "ON", "AIR BAG" warning lamp operates.
2. Compare "AIR BAG" warning lamp operation to the chart below.

"AIR BAG" warning lamp operation — User mode —	SRS condition	Reference item
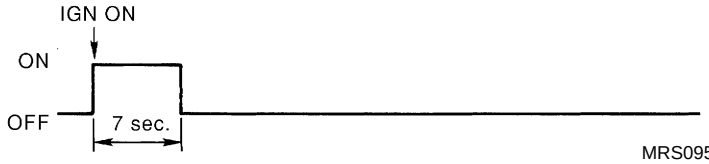 MRS095A	No malfunction is detected. No further action is necessary.	—
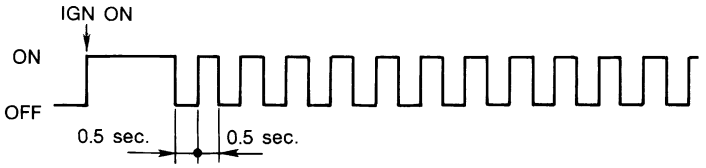 MRS096A	The system is malfunctioning and needs to be repaired as indicated.	Go to DIAGNOSTIC PROCEDURE 2 or 6 (RS-44 or RS-53).
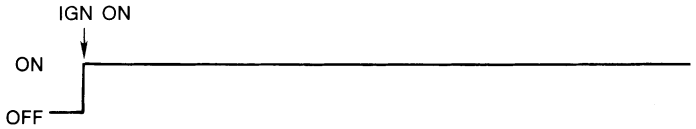 MRS097A	Air bag or/and seat belt pre-tensioner is deployed.	Go to COLLISION DIAGNOSIS (RS-64).
	Air bag fuse, diagnosis sensor unit or harness is malfunctioning and needs to be repaired.	Go to DIAGNOSTIC PROCEDURE 9 (RS-61).
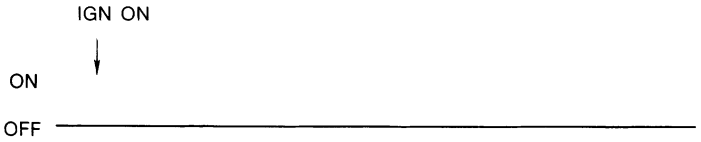 MRS098A	One of the following has occurred and needs to be repaired. ● Meter fuse is blown. ● "AIR BAG" warning lamp circuit has open or short. ● Diagnosis sensor unit is malfunctioning.	Go to DIAGNOSTIC PROCEDURE 10 (RS-63).

NOTE:
If "AIR BAG" warning lamp operates differently from the operations shown above, refer to "AIR BAG" warning lamp operation — Diagnosis mode —, DIAGNOSTIC PROCEDURE 6 (step 4), RS-53.

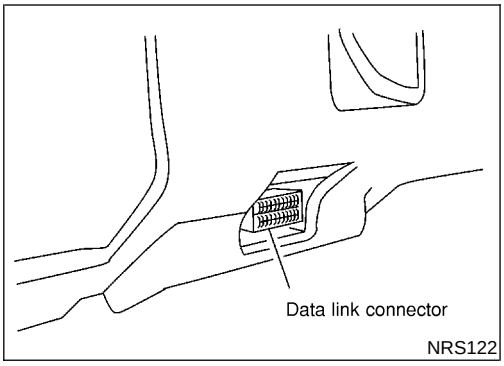

NRS122

Trouble Diagnoses with CONSULT-II

=NLRS0048

DIAGNOSTIC PROCEDURE 2

NLRS0048S01

Inspecting SRS malfunctioning parts by using CONSULT-II — Diagnosis mode

1. Turn ignition switch “OFF”.
2. Connect CONSULT-II to data link connector.

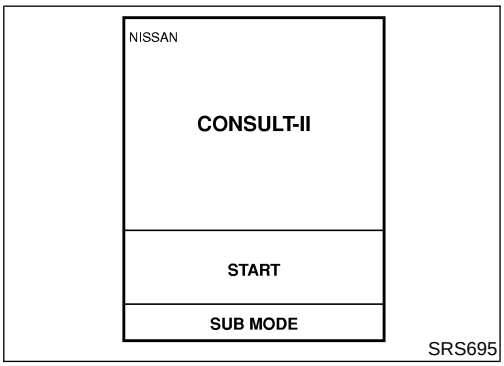

SRS695

3. Turn ignition switch “ON”.
4. Touch “START”.

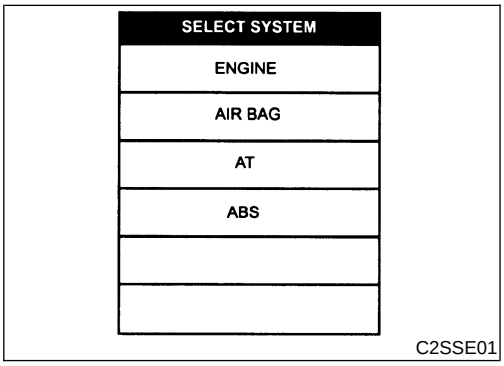

C2SSE01

5. Touch “AIR BAG”.

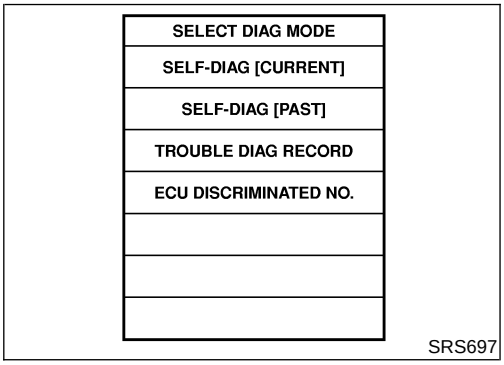

SRS697

6. Touch “SELF-DIAG [CURRENT]”.

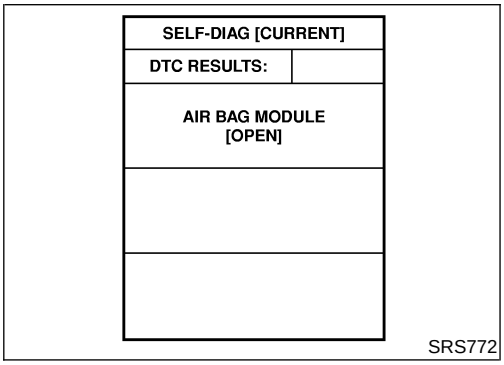

SRS772

7. Diagnostic codes are displayed on “SELF-DIAG [CURRENT]”.

SELF-DIAG [CURRENT]	
DTC RESULTS:	
NO DTC IS DETECTED. FURTHER TESTING MAY BE REQUIRED.	

SRS701

If no malfunction is detected on "SELF-DIAG [CURRENT]" but malfunction is indicated by the "AIR BAG" warning lamp, go to DIAGNOSTIC PROCEDURE 4, page RS-49, to diagnose the following situations:

- Self-diagnostic result "SELF-DIAG [PAST]" (previously stored in the memory) might not be erased after repair.
- The SRS system malfunctions intermittently.

8. Touch "PRINT".
9. Compare diagnostic codes to "CONSULT-II Diagnostic Code Chart", page RS-45.
10. Touch "BACK" key of CONSULT-II until "SELECT SYSTEM" appears in order to return to User mode from Diagnosis mode.
11. Turn ignition switch "OFF", then turn off and disconnect CONSULT-II, and disconnect both battery cables.
12. Repair the system as outlined by the "Repair order" in "CONSULT-II Diagnostic Code Chart", that corresponds to the self-diagnostic result. For replacement procedure of component parts, refer to RS-21.
13. After repairing the system, go to DIAGNOSTIC PROCEDURE 3, page RS-47 for final checking.

CONSULT-II Diagnostic Code Chart ("SELF-DIAG [CURRENT]")

NLRS0048S0102

Diagnostic item	Explanation		Repair order **"Recheck SRS at each replacement."**
NO DTC IS DETECTED.	When malfunction is indicated by the "AIR BAG" warning lamp is user mode.	• Self-diagnostic result "SELF-DIAG [PAST]" (previously stored in the memory) might not be erased after repair. • Intermittent malfunction has been detected in the past.	• Go to DIAGNOSTIC PROCEDURE 3 (RS-47) after charging battery.
	• No malfunction is detected.		• Go to DIAGNOSTIC PROCEDURE 3 (RS-47).
AIRBAG MODULE [OPEN]	• Driver air bag module circuit is open. (including the spiral cable)		1. Visually check the wiring harness connection. 2. Replace the harness if it has visible damage. 3. Replace the spiral cable. 4. Replace driver air bag module. (Before disposal, it must be deployed.) 5. Replace the diagnosis sensor unit. 6. Replace the related harness.
AIRBAG MODULE [VB-SHORT]	• Driver air bag module circuit is shorted to some power supply circuit. (including the spiral cable)		
AIRBAG MODULE [GND-SHORT]	• Driver air bag module circuit is shorted to ground. (including the spiral cable)		
AIRBAG MODULE [SHORT]	• Driver air bag module circuit is shorted to between lines.		
ASSIST A/B MODULE [VB-SHORT]	• Front passenger air bag module circuit is shorted to a power supply circuit.		1. Visually check the wiring harness connection. 2. Replace the harness if it has visible damage. 3. Replace front passenger air bag module. (Before disposal, it must be deployed.) 4. Replace the diagnosis sensor unit. 5. Replace the related harness.
ASSIST A/B MODULE [OPEN]	• Front passenger air bag module circuit is open.		
ASSIST A/B MODULE [GND-SHORT]	• Front passenger air bag module circuit is shorted to ground.		
ASSIST A/B MODULE [SHORT]	• Front passenger air bag module circuit is shorted to between lines.		

Diagnostic item	Explanation	Repair order **"Recheck SRS at each replacement."**
SIDE MODULE LH [OPEN]	● Front LH side air bag module circuit is open.	1. Visually check the wiring harness connection. 2. Replace the harness if it has visible damage. 3. Replace front LH side air bag module. (Before disposal, it must be deployed.) 4. Replace the diagnosis sensor unit. 5. Replace the related harness.
SIDE MODULE LH [VB-SHORT]	● Front LH side air bag module circuit is shorted to a power supply circuits.	
SIDE MODULE LH [GND-SHORT]	● Front LH side air bag module circuit is shorted to ground.	
SIDE MODULE LH [SHORT]	● Front LH side air bag module circuit is shorted to between lines.	
SIDE MODULE RH [OPEN]	● Front RH side air bag module circuit is open.	1. Visually check the wiring harness connection. 2. Replace the harness if it has visible damage. 3. Replace front RH side air bag module. (Before disposal, it must be deployed.) 4. Replace the diagnosis sensor unit. 5. Replace the related harness.
SIDE MODULE RH [VB-SHORT]	● Front RH side air bag module circuit is shorted to a power supply circuits.	
SIDE MODULE RH [GND-SHORT]	● Front RH side air bag module circuit is shorted to ground.	
SIDE MODULE RH [SHORT]	● Front RH side air bag module circuit is shorted to between lines.	
SATELLITE SENS LH [UNIT FAIL] SATELLITE SENS LH [COMM FAIL]	● LH side air bag (satellite) sensor	1. Visually check the wiring harness connection. 2. Replace the harness if it has visible damage. 3. Replace the LH side air bag (satellite) sensor. 4. Replace the diagnosis sensor unit. 5. Replace the related harness.
SATELLITE SENS RH [UNIT FAIL] SATELLITE SENS RH [COMM FAIL]	● RH side air bag (satellite) sensor	1. Visually check the wiring harness connection. 2. Replace the harness if it has visible damage. 3. Replace the RH side air bag (satellite) sensor. 4. Replace the diagnosis sensor unit. 5. Replace the related harness.
PRE-TEN FRONT LH [OPEN/VB-SHORT]	● Front LH seat belt pre-tensioner circuit is open or shorted to a power supply circuit.	1. Visually check the wiring harness connections. 2. Replace the harness if it has visible damage. 3. Replace front LH seat belt. (Before disposal, it must be deactivated.) 4. Replace the diagnosis sensor unit. 5. Replace the related harness.
PRE-TEN FRONT LH [GND-SHORT]	● Front LH seat belt pre-tensioner circuit is shorted to ground.	
PRE-TEN FRONT RH [OPEN/VB-SHORT]	● Front RH seat belt pre-tensioner circuit is open or shorted to some power supply circuit.	1. Visually check the wiring harness connections. 2. Replace the harness if it has visible damage. 3. Replace front RH seat belt. (Before disposal, it must be deactivated.) 4. Replace the diagnosis sensor unit. 5. Replace the related harness.
PRE-TEN FRONT RH [GND-SHORT]	● Front RH seat belt pre-tensioner circuit is shorted to ground.	

Diagnostic item	Explanation	Repair order **"Recheck SRS at each replacement."**
CONTROL UNIT	● Low battery voltage (Less than 9V)	● Go to DIAGNOSTIC PROCEDURE 3 (RS-47) after charging battery.
	● Diagnosis sensor unit is malfunctioning.	1. Visually check the wiring harness connection. 2. Replace the harness if it has visible damage. 3. Replace diagnosis sensor unit. 4. Replace the related harness.

*** Follow the procedures in numerical order when repairing malfunctioning parts. Confirm whether malfunction is eliminated using the air bag warning lamp or CONSULT-II each time repair is finished. If malfunction is still observed, proceed to the next step. When malfunction is eliminated, further repair work is not required.**

DIAGNOSTIC PROCEDURE 3

NLRS0048S02

Final checking after repairing SRS by using CONSULT-II — Diagnosis mode

1. After repairing SRS, connect both battery cables.
2. Connect CONSULT-II to data link connector.
3. Turn ignition switch from "OFF" to "ON".

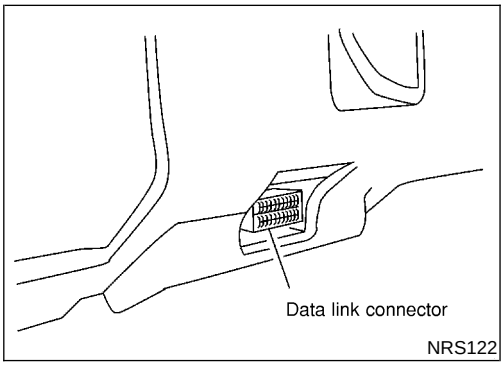

NRS122

4. Touch "START".

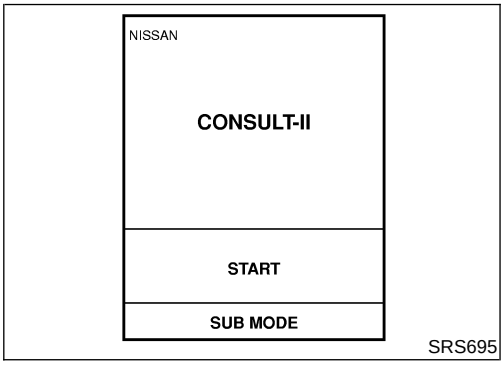

SRS695

5. Touch "AIR BAG".

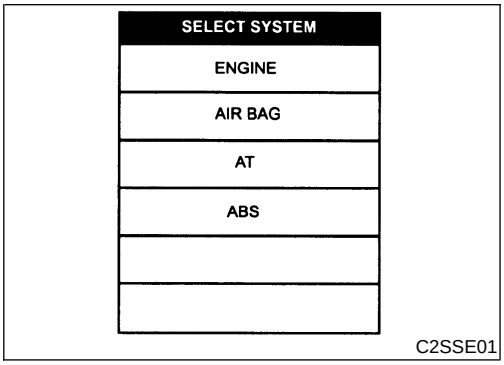

C2SSE01

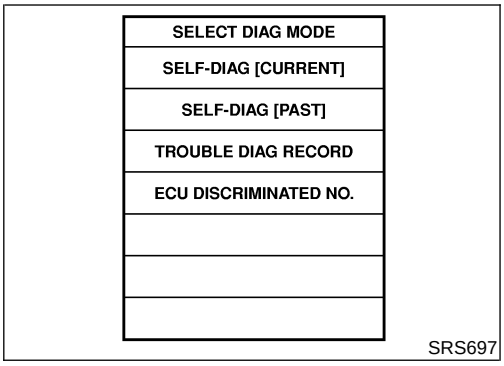

6. Touch "SELF-DIAG [CURRENT]".

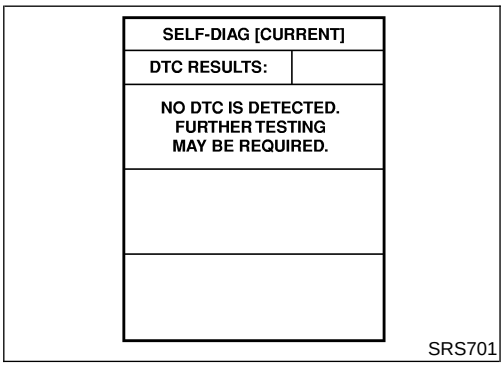

7. If no malfunction is detected on "SELF-DIAG [CURRENT]", repair of SRS is completed. Go to step 8.
   If any malfunction is displayed on "SELF-DIAG [CURRENT]", the malfunctioning part is not repaired completely or another malfunctioning part is detected. Go to DIAGNOSTIC PROCEDURE 2, page RS-44, and repair malfunctioning part completely.

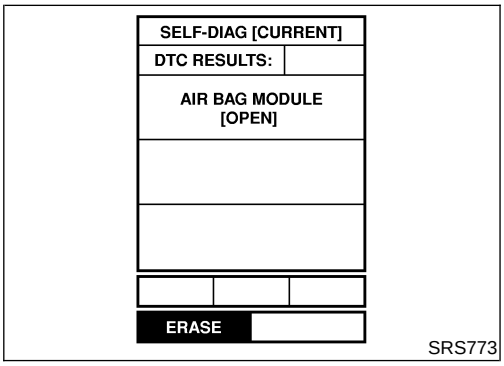

8. Touch "ERASE".

NOTE:
Touch "ERASE" to clear the memory of the malfunction ("SELF-DIAG [PAST]").
If the memory of the malfunction in "SELF-DIAG [PAST]" is not erased, the User mode shows the system malfunction by the operation of the warning lamp even if the malfunction is repaired completely.

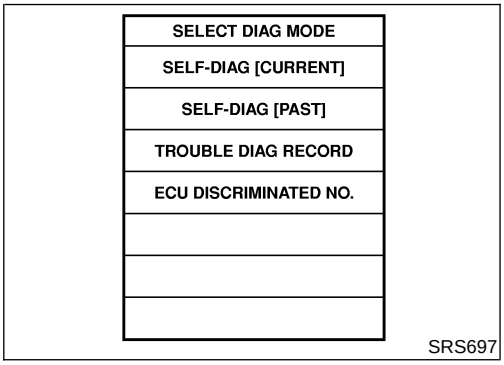

9. Touch "BACK" key of CONSULT-II to "SELECT SYSTEM" screen. Touch "SELF-DIAG [PAST]".

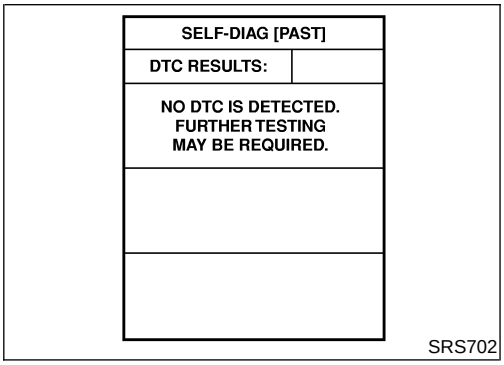

10. Check that no malfunction is detected on "SELF-DIAG [PAST]".

11. Touch "BACK" key of CONSULT-II until "SELECT SYSTEM" appears in order to return to User mode from Diagnosis mode.
12. Turn ignition switch "OFF", then turn off and disconnect CONSULT-II.
13. Go to "SRS Operation Check", page RS-43 to check SRS operation by using "AIR BAG" warning lamp with User mode.

DIAGNOSTIC PROCEDURE 4 (CONTINUED FROM DIAGNOSTIC PROCEDURE 2)

NLRS0048S03

Inspecting SRS malfunctioning record

1	CONSIDER POSSIBILITY OF NOT ERASING SELF-DIAGNOSTIC RESULT AFTER REPAIRING	
Is it the first time for maintenance of SRS?		
	Yes or No	
Yes	▶	Go to DIAGNOSTIC PROCEDURE 5 (RS-49).
No	▶	Self-diagnostic result "SELF-DIAG [PAST]" (previously stored in the memory) might not be erased after repair. Go to DIAGNOSTIC PROCEDURE 3, step 8 (RS-47).

DIAGNOSTIC PROCEDURE 5

NLRS0048S04

Inspecting SRS intermittent malfunction by using CONSULT-II — Diagnosis mode

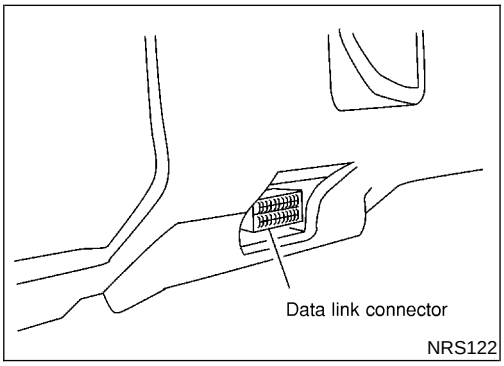

NRS122

1. Turn ignition switch "OFF".
2. Connect CONSULT-II to data link connector.

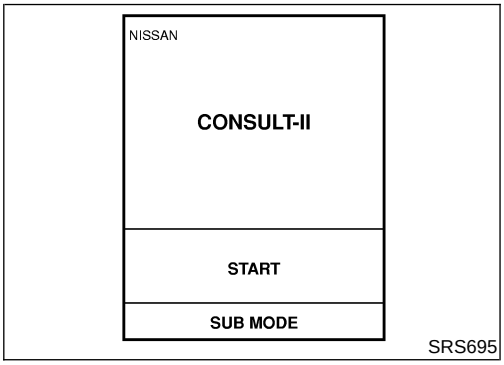

SRS695

3. Turn ignition switch "ON".
4. Touch "START".

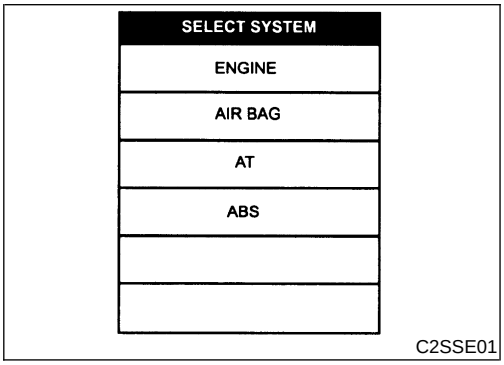

C2SSE01

5. Touch "AIR BAG".

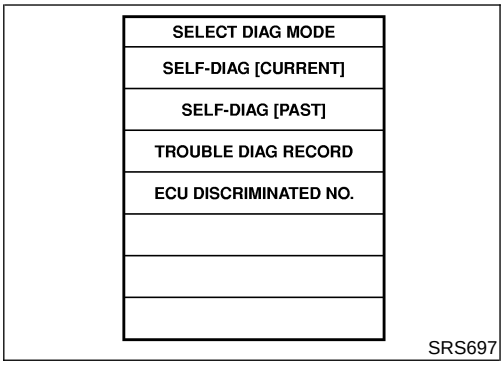

6. Touch "SELF-DIAG [PAST]".

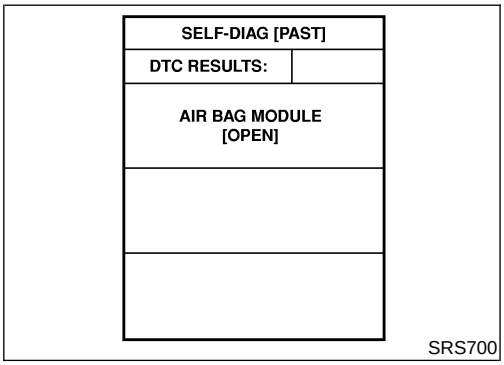

7. If diagnostic codes are displayed on "SELF-DIAG [PAST]", go to step 10.

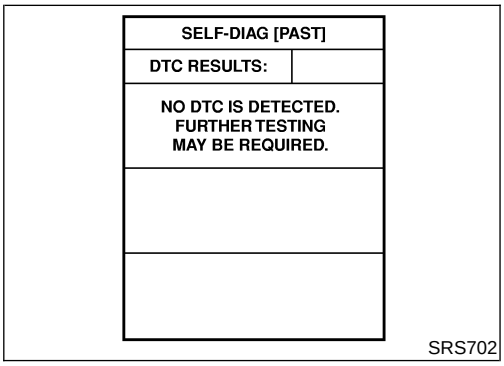

If no malfunction is detected on "SELF-DIAG [PAST]", touch "BACK" and go back to "SELECT DIAG MODE".

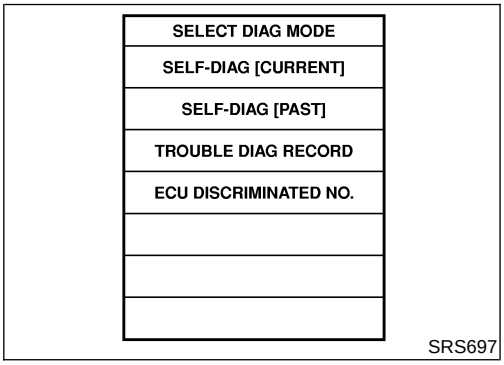

8. Touch "TROUBLE DIAG RECORD".

NOTE:
With "TROUBLE DIAG RECORD", diagnosis results previously erased by a reset operation can be displayed.

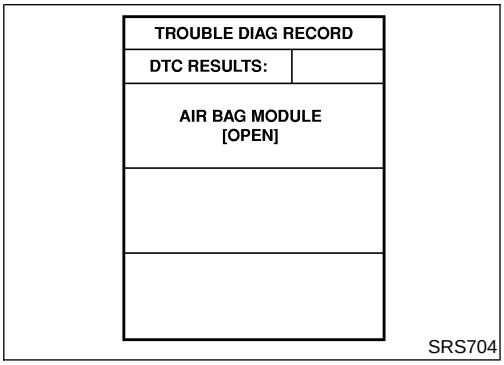

9. Diagnostic code is displayed on "TROUBLE DIAG RECORD".

10. Touch "PRINT".
11. Compare diagnostic codes to "Intermittent Malfunction Diagnostic Code Chart", page RS-51.
12. Touch "BACK" key of CONSULT-II until "SELECT SYSTEM" appears.
13. Turn ignition switch "OFF", then turn off and disconnect CONSULT-II, and disconnect both battery cables.
14. Repair the system as outlined by the "Repair order" in "Intermittent Malfunction Diagnostic Code Chart", that corresponds to the self-diagnostic result. For replacement procedure of component parts, refer to RS-21.
15. Go to DIAGNOSTIC PROCEDURE 3, page RS-47, for final checking.

INTERMITTENT MALFUNCTION DIAGNOSTIC CODE CHART ("SELF-DIAG [PAST] or TROUBLE DIAG RECORD")

NLRS0048S0402

Diagnostic item	Explanation	Repair order
NO DTC IS DETECTED	● No malfunction is detected.	● Go to DIAGNOSTIC PROCEDURE 3 (RS-47).
AIRBAG MODULE [OPEN]	● Driver air bag module circuit is open. (including the spiral cable)	1. Visually check the wiring harness connection. 2. Replace the harness if it has visible damage. 3. If the harness check is OK, replace the spiral cable, diagnosis sensor unit and driver air bag module. (Before disposing of the driver air bag module, it must be deployed.)
AIRBAG MODULE [VB-SHORT]	● Driver air bag module circuit is shorted to a power supply circuit. (including the spiral cable)	
AIRBAG MODULE [GND-SHORT]	● Driver air bag module circuit is shorted to ground. (including the spiral cable)	
AIRBAG MODULE [SHORT]	● Driver air bag module circuit is shorted to between lines.	
ASSIST A/B MODULE [VB-SHORT]	● Front passenger air bag module circuit is shorted to a power supply circuit.	1. Visually check the wiring harness connection. 2. Replace the harness if it has visible damage. 3. If the harness check is OK, replace the diagnosis sensor unit and passenger air bag module. (Before disposing of the passenger air bag module, it must be deployed.)
ASSIST A/B MODULE [OPEN]	● Front passenger air bag module circuit is open.	
ASSIST A/B MODULE [GND-SHORT]	● Front passenger air bag module circuit is shorted to ground.	
ASSIST A/B MODULE [SHORT]	● Front passenger air bag module circuit is shorted to between lines.	
SIDE MODULE LH [OPEN]	● Front LH side air bag module circuit is open.	1. Visually check the wiring harness connection. 2. Replace the harness if it has visible damage. 3. If the harness check is OK, replace the diagnosis sensor unit and front LH side air bag module. (Before disposing of the front LH side air bag module, it must be deployed.)
SIDE MODULE LH [VB-SHORT]	● Front LH side air bag module circuit is shorted to a power supply circuit.	
SIDE MODULE LH [GND-SHORT]	● Front LH side air bag module circuit is shorted to ground.	
SIDE MODULE LH [SHORT]	● Front LH side air bag module circuit is shorted to between lines.	

Diagnostic item	Explanation	Repair order
SIDE MODULE RH [OPEN]	● Front RH side air bag module circuit is open.	1. Visually check the wiring harness connection. 2. Replace the harness if it has visible damage. 3. If the harness check is OK, replace the diagnosis sensor unit and front RH side air bag module. (Before disposing of the front RH side air bag module, it must be deployed.)
SIDE MODULE RH [VB-SHORT]	● Front RH side air bag module circuit is shorted to a power supply circuit.	
SIDE MODULE RH [GND-SHORT]	● Front RH side air bag module circuit is shorted to ground.	
SIDE MODULE RH [SHORT]	● Front RH side air bag module circuit is shorted to between lines.	
SATELLITE SENS LH [UNIT FAIL] SATELLITE SENS LH [COMM FAIL]	● LH side air bag (satellite) sensor	1. Visually check the wiring harness connection. 2. Replace the harness if it has visible damage. 3. If the harness check is OK, replace the diagnosis sensor unit and LH side air bag (satellite) sensor.
SATELLITE SENS RH [UNIT FAIL] SATELLITE SENS RH [COMM FAIL]	● RH side air bag (satellite) sensor	1. Visually check the wiring harness connection. 2. Replace the harness if it has visible damage. 3. If the harness check is OK, replace the diagnosis sensor unit and RH side air bag (satellite) sensor.
PRE-TEN FRONT LH [OPEN/VB-SHORT]	● Front LH seat belt pre-tensioner circuit is open or shorted to a power supply circuit.	1. Visually check the wiring harness connections. 2. Replace the harness if it has visible damage. 3. If the harness check is OK, replace the diagnosis sensor unit and front LH seat belt. (Before disposing of the front LH seat belt pre-tensioner, if must be deployed.)
PRE-TEN FRONT LH [GND-SHORT]	● Front LH seat belt pre-tensioner circuit is shorted to ground.	
PRE-TEN FRONT RH [OPEN/VB-SHORT]	● Front RH seat belt pre-tensioner circuit is open or shorted to a power supply circuit.	1. Visually check the wiring harness connections. 2. Replace the harness if it has visible damage. 3. If the harness check is OK, replace the diagnosis sensor unit and front RH seat belt. (Before disposing of the front RH seat belt pre-tensioner, if must be deployed.)
PRE-TEN FRONT RH [GND-SHORT]	● Front RH seat belt pre-tensioner circuit is shorted to ground.	
CONTROL UNIT	● Diagnosis sensor unit is malfunctioning.	1. Visually check the wiring harness connection. 2. Replace the harness if it has visible damage. 3. If the harness check is OK, replace the diagnosis sensor unit.

* Follow the procedures in numerical order when repairing malfunctioning parts, then make the final system check.

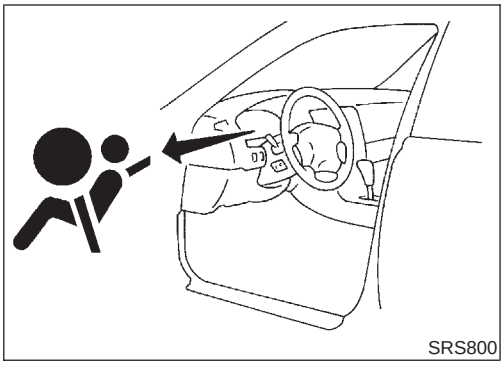

Trouble Diagnoses without CONSULT-II

=NLRS0049

DIAGNOSTIC PROCEDURE 6

NLRS0049S01

Inspecting SRS malfunctioning parts by using "AIR BAG" warning lamp — Diagnosis mode

NOTE:
SRS will not enter Diagnosis mode if no malfunction is detected in User mode.

1. Turn ignition switch "ON".
2. After "AIR BAG" warning lamp lights for 7 seconds, turn ignition switch "OFF" within 1 second.
3. Wait more than 3 seconds.
4. Repeat steps 1 to 3 three times.
5. Turn ignition switch "ON".
   SRS is now in Diagnosis mode.
6. "AIR BAG" warning lamp operates in Diagnosis mode as follows:

NOTE:
If SRS does not enter Diagnosis mode even though malfunction is detected in User mode, check the battery voltage.
If the battery voltage is less than 9V, charge the battery. Then go to DIAGNOSTIC PROCEDURE 7, page RS-58.
If the battery voltage is OK, replace the diagnosis sensor unit.

No.	"AIR BAG" warning lamp flash pattern — Diagnosis mode —		SRS condition
1	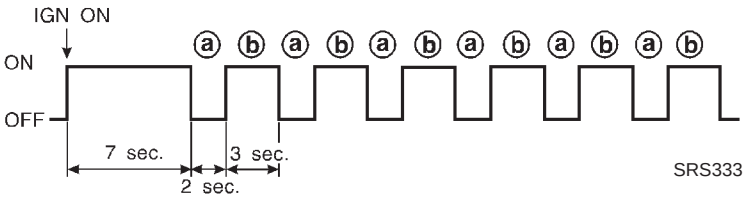	**a** through **b** are repeated.	• Diagnosis results (previously stored in the memory) might not be erased after repair. • Intermittent malfunction has been detected in the past. Go to DIAGNOSTIC PROCEDURE 8 (RS-60).
2	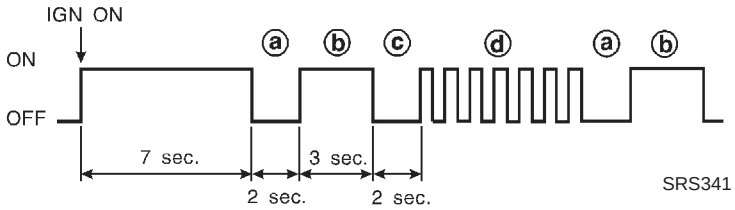	**a** through **d** are repeated. **b** — Driver and front passenger air bag and front seat belt pre-tensioner marker (For identifying driver air bag, front passenger air bag and/or front seat belt pre-tensioners malfunctioning) **d** — Indicates malfunctioning part. The number of flash varies with malfunctioning part (0.5 sec. ON and 0.5 sec. OFF is counted as one flash.)	The system is malfunctioning and needs to be repaired.
3	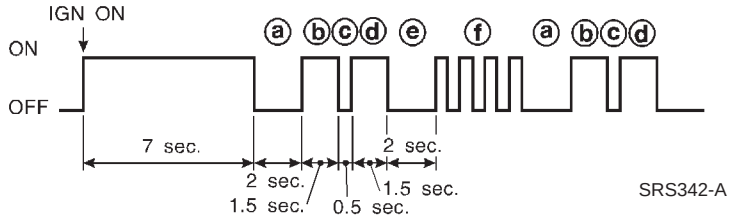	**a** through **f** are repeated. **b**, **c**, **d** — Front side air bag marker (For identifying front side air bag malfunctioning) **f** — Indicates malfunctioning part. The number of flash varies with malfunctioning part (0.5 sec. ON and 0.5 sec. OFF is counted as one flash.)	

7. Malfunctioning part is indicated by the number of flashes (part **d** or **f**). Compare the number of flashes to "Air Bag Warning Lamp Flash Code Chart", page RS-55, and locate malfunctioning part.
8. Turn ignition switch "OFF", and disconnect both battery cables.
9. Repair the system as outlined by the "Repair order" in "Warning Lamp Flash Code Chart" that corresponds to the flash code. For replacement procedure of component parts, refer to RS-21.
10. After repairing the system, go to DIAGNOSTIC PROCEDURE 7, page RS-58.

Air Bag Warning Lamp Flash Code Chart (Diagnosis mode)

NLRS0049S0101

• Diagnosis results (previously stored in the memory) might not be erased after repair. • Intermittent malfunction has been detected in the past.	Flash pattern	
	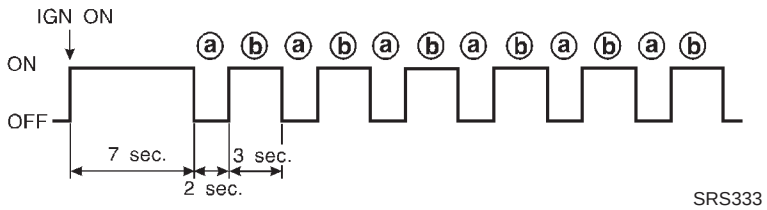 SRS333	**a** through **b** are repeated.
	Repair order	
	• Go to DIAGNOSTIC PROCEDURE 8 (RS-60).	
Front RH seat belt pre-tensioner circuit is malfunctioning. (**d**: 1 flash)	Flash pattern	
	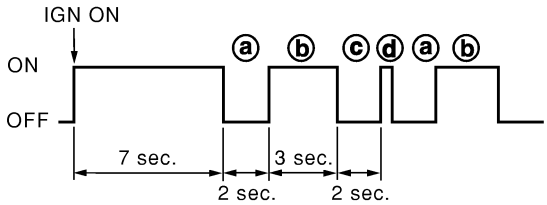 SRS801	**a** through **d** are repeated. **d** — One flash indicates malfunctioning front RH seat belt pre-tensioner circuit.
	Repair order ("Recheck SRS at each replacement").	
	1. Visually check the wiring harness connections. 2. Replace the harness if it has visible damage. 3. Replace front RH seat belt pre-tensioner. (Before disposal, it must be deactivated.) 4. Replace the diagnosis sensor unit. 5. Replace the related harness.	
Driver air bag module circuit is malfunctioning. (**d**: 2 flashes)	Flash pattern	
	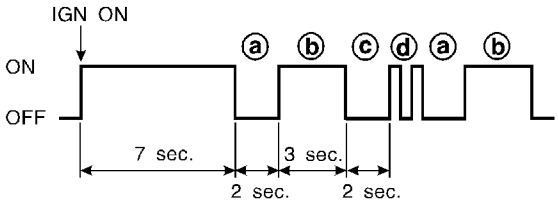 SRS334	**a** through **d** are repeated. **d** — Two flashes indicate malfunctioning driver air bag module circuit.
	Repair order ("Recheck SRS at each replacement.")	
	1. Visually check the wiring harness connection. 2. Replace the harness if it has visible damage. 3. Replace the spiral cable. 4. Replace driver air bag module. (Before disposal, it must be deployed.) 5. Replace the diagnosis sensor unit. 6. Replace the related harness.	

Front LH seat belt pre-tensioner circuit is malfunctioning. (**d**: 3 flashes)	Flash pattern	
	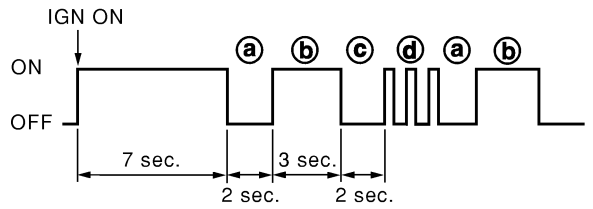 SRS802	**a** through **d** are repeated. **d** — Three flashes indicate malfunctioning front LH seat belt pre-tensioner circuit.
	Repair order ("Recheck SRS at each replacement.")	
	1. Visually check the wiring harness connections. 2. Replace the harness if it has visible damage. 3. Replace front LH seat belt pre-tensioner. (Before disposal, it must be deactivated.) 4. Replace the diagnosis sensor unit. 5. Replace the related harness.	
Diagnosis sensor unit is malfunctioning. (**d**: 7 flashes)	Flash pattern	
	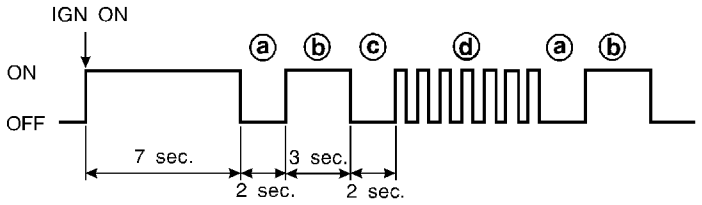 SRS335	**a** through **d** are repeated. **d** — Seven flashes indicate malfunctioning diagnosis sensor unit.
	Repair order ("Recheck SRS at each replacement.")	
	1. Visually check the wiring harness connections. 2. Replace the harness if it has visible damage. 3. Replace the diagnosis sensor unit. 4. Replace the related harness.	
Front passenger air bag module circuit is malfunctioning. (**d**: 8 flashes)	Flash pattern	
	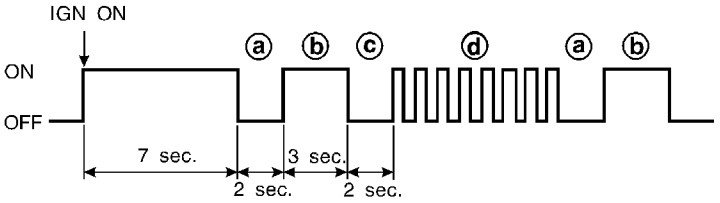 SRS336	**a** through **d** are repeated. **d** — Eight flashes indicate malfunctioning front passenger air bag module circuit.
	Repair order ("Recheck SRS at each replacement.")	
	1. Visually check the wiring harness connection. 2. Replace the harness if it has visible damage. 3. Replace front passenger air bag module. (Before disposal, it must be deployed.) 4. Replace the diagnosis sensor unit. 5. Replace the related harness.	

Front RH side air bag module circuit is malfunctioning. (**f**: 1 flash)	Flash pattern	
	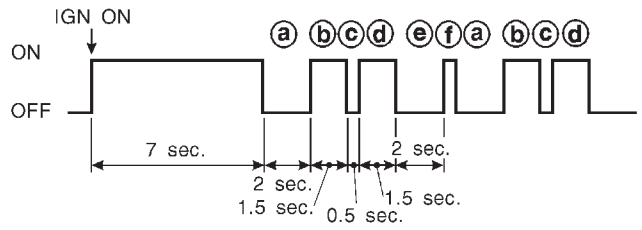	**a** through **f** are repeated. **f** — One flash indicates malfunctioning front RH side air bag module circuit.
	Repair order ("Recheck SRS at each replacement.")	
	1. Visually check the wiring harness connection. 2. Replace the harness if it has visible damage. 3. Replace front RH side air bag module. (Before disposal, it must be deployed.) 4. Replace the diagnosis sensor unit. 5. Replace the related harness.	
Front LH side air bag module circuit is malfunctioning. (**f**: 2 flashes)	Flash pattern	
	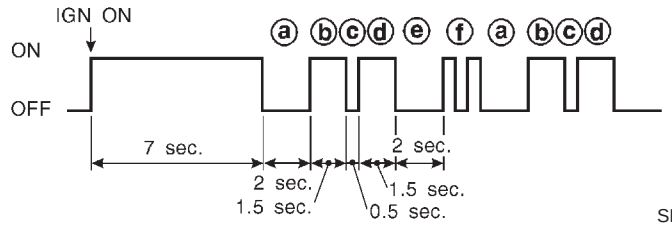	**a** through **f** are repeated. **f** — Two flashes indicate malfunctioning front LH side air bag module circuit.
	Repair order ("Recheck SRS at each replacement.")	
	1. Visually check the wiring harness connection. 2. Replace the harness if it has visible damage. 3. Replace front LH side air bag module. (Before disposal, it must be deployed.) 4. Replace the diagnosis sensor unit. 5. Replace the related harness.	
RH side air bag (satellite) sensor is malfunctioning. (**f**: 3 flashes)	Flash pattern	
	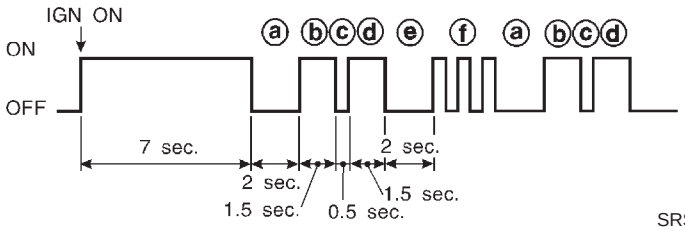	**a** through **f** are repeated. **f** — Three flashes indicate malfunctioning RH side air bag (satellite) sensor circuit.
	Repair order ("Recheck SRS at each replacement.")	
	1. Visually check the wiring harness connection. 2. Replace the harness if it has visible damage. 3. Replace the RH side air bag (satellite) sensor. 4. Replace the diagnosis sensor unit. 5. Replace the related harness.	

	Flash pattern	
LH side air bag (satellite) sensor is malfunctioning. (**f**: 4 flashes)	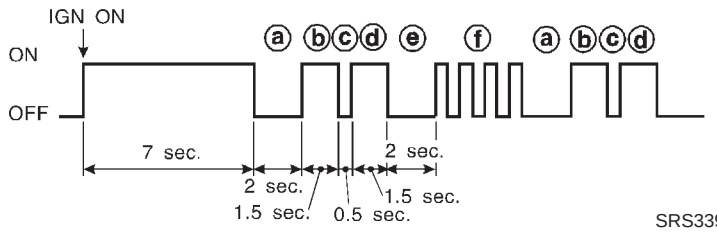	**a** through **f** are repeated. **f** — Four flashes indicate malfunctioning LH side air bag (satellite) sensor circuit.
	Repair order ("Recheck SRS at each replacement.")	
	1. Visually check the wiring harness connection. 2. Replace the harness if it has visible damage. 3. Replace the LH side air bag (satellite) sensor. 4. Replace the diagnosis sensor unit. 5. Replace the related harness.	

*** Follow the procedures in numerical order when repairing malfunctioning parts. Confirm whether malfunction is eliminated using the air bag warning lamp or CONSULT-II each time repair is finished. If malfunction is still observed, proceed to the next step. When malfunction is eliminated, further repair work is not required.**

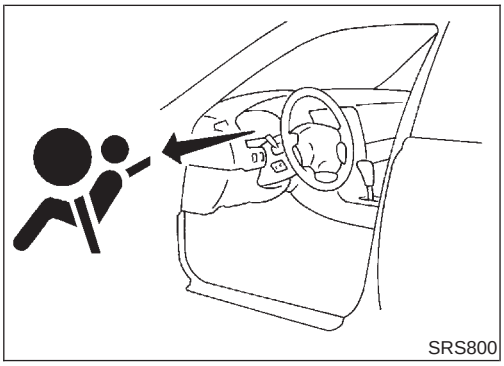

DIAGNOSTIC PROCEDURE 7

NLRS0049S02

Final checking after repairing SRS by using "AIR BAG" warning lamp — Diagnosis mode and User mode

1. After repairing SRS connect both battery cables.
2. Open driver's door.
3. Turn ignition switch from "OFF" to "ON".
4. "AIR BAG" warning lamp operates in Diagnosis mode as follows:

No.	"AIR BAG" warning lamp flash pattern — Diagnosis mode —		SRS condition
1	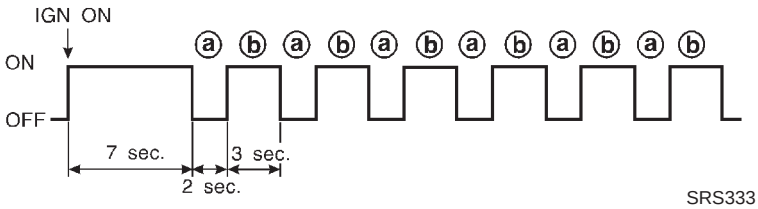	**a** through **b** are repeated.	No malfunction is detected or repair is completed. No further action is necessary.
2	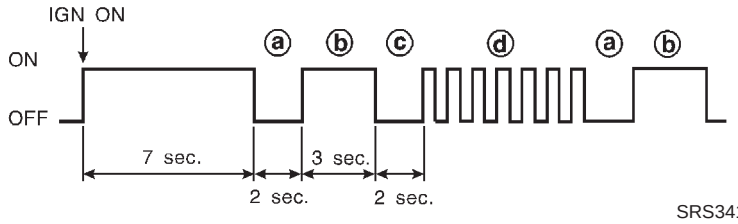	**a** through **d** are repeated. **b** — Driver and front passenger air bag and front seat belt pre-tensioner marker (For identifying driver air bag, front passenger air bag and/or front seat belt pre-tensioners malfunctioning) **d** — Indicates malfunctioning part. The number of flashes varies with malfunctioning part (0.5 sec. ON and 0.5 sec. OFF is counted as one flash.)	The system is malfunctioning and needs to be repaired.
3	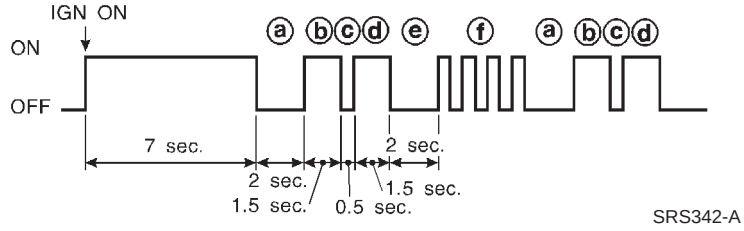	**a** through **f** are repeated. **b**, **c**, **d** — Front side air bag marker (For identifying front side air bag malfunctioning) **f** — Indicates malfunctioning part. The number of flashes varies with malfunctioning part (0.5 sec. ON and 0.5 sec. OFF is counted as one flash.)	

NOTE:
When diagnosis sensor unit is replaced with new one, "AIR BAG" warning lamp will operate in User mode. Checking "AIR BAG" warning lamp operation in Diagnosis mode is not required. Go to step 6.

5. If "AIR BAG" warning lamp operates as shown in No. 1 in chart above, turn ignition switch "OFF" to reset from Diagnosis mode to User mode and to erase the memory of the malfunction. Then go to step 6.
   If "AIR BAG" warning lamp operates as shown in No. 2 or No. 3 in chart above, the malfunctioning part is not repaired completely, or another malfunctioning part is detected. Go to DIAGNOSTIC PROCEDURE 6, page RS-53, and repair malfunctioning part completely.
6. Turn ignition switch "ON". "AIR BAG" warning lamp operates in User mode. Compare "AIR BAG" warning lamp operation to the chart on the next page

NOTE:
When a malfunction is detected, switch from Diagnosis mode to user mode by turning the ignition switch as follows:

1) Turn ignition switch "ON".
2) After "AIR BAG" warning lamp lights for 7 seconds, turn ignition switch "OFF" within 1 second.
3) Wait more than 3 seconds.
4) Repeat steps 1 to 3 three times.
5) Turn ignition switch "ON".

SRS is now in User mode.

"AIR BAG" warning lamp operation — User mode —	SRS condition	Reference item
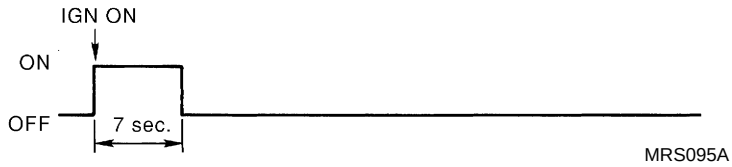	No malfunction is detected. No further action is necessary.	—
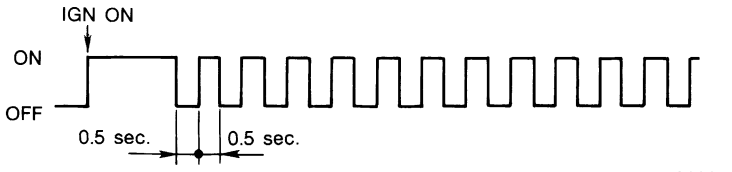	The system is malfunctioning and needs to be repaired as indicated.	Go to DIAGNOSTIC PROCEDURE 6 (RS-53).
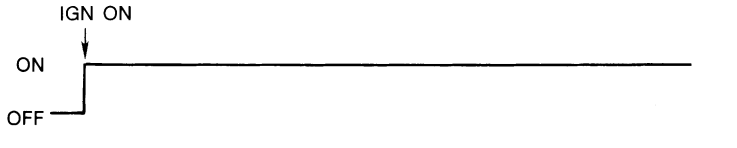	Air bag is deployed. Seat belt pre-tensioner is deployed.	Go to COLLISION DIAGNOSIS (RS-64).
	Air bag fuse, diagnosis sensor unit or harness is malfunctioning and needs to be repaired.	Go to DIAGNOSTIC PROCEDURE 9 (RS-61).
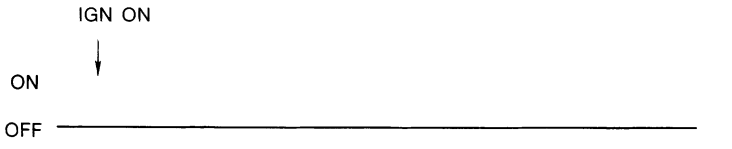	One of the following has occurred and needs to be repaired. ● Meter fuse is blown. ● "AIR BAG" warning lamp circuit has open or short. ● Diagnosis sensor unit is malfunctioning.	Go to DIAGNOSTIC PROCEDURE 10 (RS-63).

DIAGNOSTIC PROCEDURE 8 (CONTINUED FROM DIAGNOSTIC PROCEDURE 6)

NLRS0049S03

Inspecting SRS malfunctioning record

1	CONSIDER POSSIBILITY OF NOT ERASING SELF-DIAGNOSTIC RESULT AFTER REPAIRING	
Is it the first time for maintenance of SRS? **Yes or No**		
Yes	▶	Go to DIAGNOSTIC PROCEDURE 5 (RS-49). (Further inspection cannot be performed without CONSULT-II.)
No	▶	Diagnosis results (previously stored in the memory) might not be erased after repair. Go to DIAGNOSTIC PROCEDURE 7, step 5 (RS-58).

Trouble Diagnoses: “AIR BAG” Warning Lamp Does Not Turn Off

=NLRS0050

DIAGNOSTIC PROCEDURE 9

NLRS0050S01

1	SEE THE DEPLOYMENT OF AIR BAG MODULE	
Is air bag module deployed?		
	Yes or No	
Yes	▶	Refer to COLLISION DIAGNOSIS (RS-64).
No	▶	GO TO 2.

2	CHECK AIR BAG FUSE	
Is SRS “Air Bag” fuse OK?		

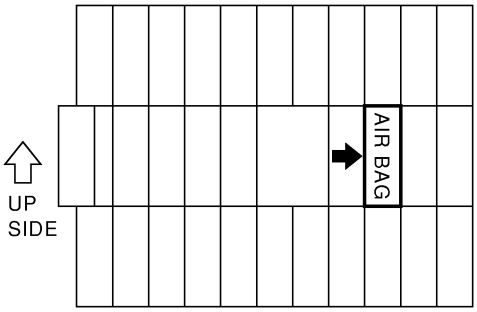

SRS835

	OK or NG	
OK	▶	GO TO 4.
NG	▶	GO TO 3.

3	CHECK AIR BAG FUSE AGAIN	
Replace “AIR BAG” fuse and turn ignition switch ON.		
	Is “AIR BAG” fuse blown again?	
Yes	▶	Repair main harness.
No	▶	**INSPECTION END**

4	CHECK DIAGNOSIS SENSOR UNIT

Connect CONSULT-II and touch “START”.

- Is “AIR BAG” displayed on CONSULT-II?

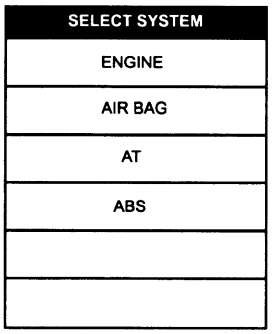

C2SSE01

Yes or No

Yes	▶	GO TO 5.
No	▶	Visually check the wiring harness connection of diagnosis sensor unit. If the harness connection check result is OK, replace diagnosis sensor unit.

5	CHECK HARNESS CONNECTION

Is harness connection between warning lamp and diagnosis sensor unit OK?

OK or NG

OK	▶	Replace diagnosis sensor unit.
NG	▶	Connect “AIR BAG” warning lamp and diagnosis sensor unit connector properly. If “AIR BAG” warning lamp still does not go off, replace harness.

Trouble Diagnoses: “AIR BAG” Warning Lamp Does Not Turn On

=NLRS0051

DIAGNOSTIC PROCEDURE 10

NLRS0051S01

1	CHECK “METER” FUSE

Is meter fuse OK?

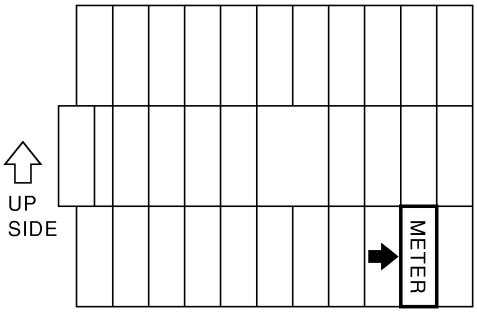

SRS836

OK or NG

OK	▶	GO TO 3.
NG	▶	GO TO 2.

2	CHECK “METER” FUSE AGAIN

Replace meter fuse and turn ignition switch ON.

Is meter fuse blown again?

Yes	▶	Repair main harness.
No	▶	**INSPECTION END**

3	CHECK “AIR BAG” WARNING LAMP LED

Is “AIR BAG” warning lamp LED OK?

OK or NG

OK	▶	GO TO 4.
NG	▶	Replace combination meter.

4	CHECK HARNESS CONNECTION BETWEEN DIAGNOSIS SENSOR UNIT AND “AIR BAG” WARNING LAMP

Disconnect diagnosis sensor unit connector and turn ignition switch “ON”.
- Does “AIR BAG” warning lamp turn on?

Yes or No

Yes	▶	Replace diagnosis sensor unit.
No	▶	Check the ground circuit of “AIR BAG” warning lamp.

Collision Diagnosis

=NLRS0033

FOR FRONTAL COLLISION

NLRS0033S07

To repair the SRS, perform the following steps.

When SRS (except the side air bag modules) is activated in a collision:

1) Replace the diagnosis sensor unit.
2) Remove the air bag modules (except the side air bag modules) and front seat belt pre-tensioner assemblies.
3) Check the SRS components using the table shown below:

- Replace any SRS components showing visible signs of damage (dents, cracks and deformation).

4) Install new air bag modules (except the side air bag module) and front seat belt pre-tensioner assemblies.
5) Conduct self-diagnosis using CONSULT-II or “AIR BAG” warning lamp. Refer to “SRS Operation Check” for details (RS-43). Ensure entire SRS operation properly.

When SRS is not activated in a collision:

1) Check the SRS components using the table shown below:

- Replace any SRS components showing visible signs of damage (dents, cracks and deformation).

2) Conduct self-diagnosis using CONSULT-II or “AIR BAG” warning lamp. Refer to “SRS Operation Check” for details (RS-43). Ensure entire SRS operation properly.

SRS Inspection (For frontal collision)

NLRS0033S0701

Part	SRS is activated	SRS is NOT activated
Air bag module (driver or front passenger side)	REPLACE Install with new special bolts coated with bonding agent.	1. Remove air bag module. Check harness cover and connectors for damage, terminals for deformities, and harness for binding. 2. a. Install driver air bag module into the steering wheel to check fit and alignment with the wheel. b. Install front passenger air bag module into the instrument panel to check fit with the instrument panel. 3. No damage found, reinstall with new bolts coated with bonding agent. 4. If damaged—REPLACE. Install air bag modules with new special bolts coated with bonding agent. Air bag must be deployed before disposal.
Front seat belt pre-tensioner assembly	REPLACE Install seat belt pre-tensioner with new bolts.	1. Remove front seat belt pre-tensioners. Check harness cover and connectors for damage, terminals for deformities, and harness for binding. 2. Check belts for damage and anchors for loose mounting. 3. Check retractor for smooth operation. 4. If no damage is found, reinstall front seat belt pre-tensioner assembly. 5. If damaged—REPLACE. Install the front seat belt pre-tensioners with new bolts coated with bonding agent. Front seat belt pre-tensioners must be deployed before disposal.
Diagnosis sensor unit	REPLACE Install with new bolts coated with bonding agent.	1. Check case for dents, cracks or deformities. 2. Check connectors for damage, and terminals for deformities. 3. If no damage is found, reinstall with new special bolts and ground bolt coated with bonding agent. 4. If damaged—REPLACE. Install diagnosis sensor unit with new special bolts and ground bolt coated with bonding agent.
Steering wheel	1. Visually check steering wheel for deformities. 2. Check harness (built into steering wheel) and connectors for damage, and terminals for deformities. 3. Install driver air bag module to check fit or alignment with steering wheel. 4. Check steering wheel for excessive free play. 5. If damaged—REPLACE.	
Spiral cable	1. Visually check spiral cable and combination switch for damage. 2. Check connectors and protective tape for damage. 3. Check steering wheel for noise, binding or heavy operation. 4. If damaged—REPLACE.	

Part	SRS is activated	SRS is NOT activated
Harness and Connectors	1. Check connectors for poor connection, damage, and terminals for deformities. 2. Check harness for binding, chafing, cuts, or deformities. 3. If no damage is found, reinstall the harness and connectors. 4. Damaged—REPLACE damaged section of harness. Do not attempt to repair, splice or modify any SRS harness.	
Instrument panel	1. When passenger air bag inflates, check the following points for bending, deformities or cracks. ● Opening portion for front passenger air bag 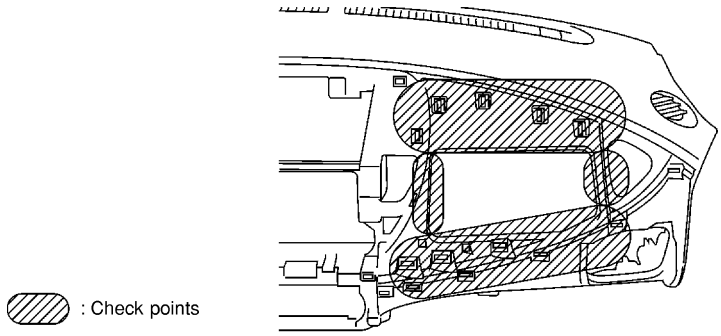 : Check points NRS118 ● Front passenger air bag module brackets 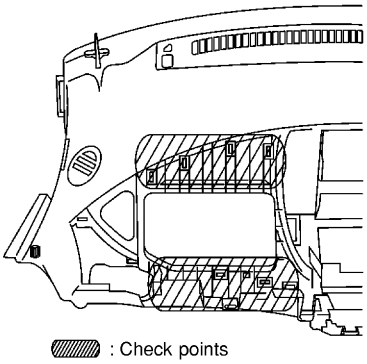 : Check points NRS119 ● The portions securing the instrument panel 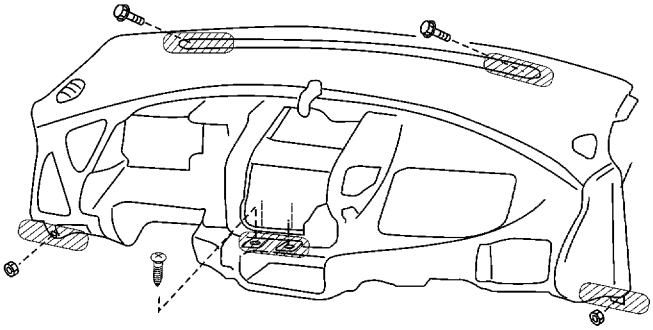 : Check points NRS120 2. If no damage is found, reinstall the instrument panel. 3. If damaged—REPLACE the instrument panel with bolts.	

FOR SIDE COLLISION

=NLRS0033S08

To repair the SRS for a side collision, perform the following steps.

When the side air bag is activated in the side collision:

1) Replace the following component:
- All parts of front seatback (including front seatback frame) with side air bag module (on the side on which side air bag is activated)
- Diagnosis sensor unit
- Side air bag (satellite) sensor (on the side on which side air bag is activated)

2) Check the SRS components and the related parts using the table shown below.
- Replace any SRS components and the related parts showing visible signs of damage (dents, cracks, deformation).

3) Conduct self-diagnosis using CONSULT-II or "AIR BAG" warning lamp. Refer to "SRS Operation Check" for details (RS-43). Ensure entire SRS operation properly.

When SRS is not activated in the side collision:

1) Check the SRS components and the related parts using the table shown below.
- Replace any SRS components and the related parts showing visible signs of damage (dents, cracks, deformation).

2) Conduct self-diagnosis using CONSULT-II or "AIR BAG" warning lamp. Refer to "SRS Operation Check" for details (RS-43). Ensure entire SRS operation properly.

SRS Inspection (For side collision)

NLRS0033S0801

Part	Side air bag is activated	SRS is NOT activated
Front (LH or RH) side air bag module	REPLACE all parts of front seatback with deployed front side air bag module.	1. Check for visible signs of damage (dents, tears, deformation) of the seat back on the collision side. 2. If damaged—REPLACE the damaged seat parts with new bolts and remove the front side air bag module. 3. Check for visible signs of damage (tears etc.) of the side air bag module. 4. Check harness and connectors for damage, and terminals for deformities. 5. If no damaged is found, reinstall the front side air bag module with new nuts. 6. If damaged—REPLACE the front side air bag module with new nuts. Air bag must be deployed before disposal.
(LH or RH) side air bag (satellite) sensor	REPLACE the side air bag (satellite) sensor on the collision side with new nuts coated with bonding agent. (Repair the center pillar inner, etc. before installing new one if damaged.)	1. Remove the satellite sensor on the collision side. Check harness connectors for damage, terminals for deformities, and harness for binding. 2. Check for visible signs of damage (dents, cracks, deformation) of the satellite sensor. 3. Install the side air bag (satellite) sensor to check fit. 4. If no damage is found, reinstall the side air bag (satellite) sensor with new nuts. 5. If damaged—REPLACE the side air bag sensor with new nuts coated with bonding agent.
Diagnosis sensor unit	REPLACE the diagnosis sensor unit with the new bolts.	1. Check case and bracket for dents, cracks or deformities. 2. Check connectors for damage, and terminals for deformities. 3. If no damage is found, reinstall the diagnosis sensor unit with new special bolts and ground bolt. 4. If damaged—REPLACE. Install the diagnosis sensor unit with new special bolts and ground bolt.

Part	Side air bag is activated	SRS is NOT activated
Front seat belt pre-tensioner assembly	1. Check if the seat belt can be extended smoothly. If the seat belt cannot be extended smoothly. – Check for deformities of the center pillar inner. – If the center pillar inner has no damage, REPLACE the front seat belt pre-tensioner assembly. 2. Remove the front seat belt pre-tensioner assembly on the collision side. Check harness cover and connectors for damage, terminals for deformities, and harness for binding. 3. Check for visible signs of damage (dents, cracks, deformation) of the front seat belt pre-tensioner assembly. 4. If no damage is found, reinstall the front seat belt pre-tensioner assembly. 5. If damaged—REPLACE the front seat belt pre-tensioner assembly with new bolts coated with bonding agent. The front seat belt pre-tensioner assembly must be deployed before disposal.	
Seat with built-in side air bag	REPLACE all parts of front seatback (including front seatback frame)	1. Visually check the seat on the collision side. 2. Remove the seat on the collision side and check the following for damage and deformities. ● Harness, connectors and terminals ● Frame and recliner (for front and rear seat), and also adjuster and slides (for front seat) 3. If no damage is found, reinstall the seat. 4. If damaged—REPLACE the damaged seat parts with new bolts.
Center pillar inner	1. Check the center pillar inner on the collision side for damage (dents, cracks, deformation). 2. If damaged—REPAIR the center pillar inner.	
Trim	1. Check for visible signs of damage (dents, cracks, deformation) of the interior trim on the collision side. 2. If damaged—REPLACE the damaged trim parts.	

NOTES